TECHNICAL SPECIFICATIONS

EQUIPMENT MAINTENANCE

1.01 GENERAL:

A. The services shall consist of performing required operational and preventive maintenance services of the generators and transfer switches at various Oahu projects. The service shall include quarterly inspections, annual inspections, and one (1) three-year inspection per generator. The term of this agreement shall be for a period of three (3) years beginning on the date of the Notice to Proceed.

B. Such services are to be conducted in accordance with the best practices of the industry governing the operation and maintenance of generators and in accordance with manufacturer's instructional manuals, so as to assure the final effluent is within the State Department of Health and EPA requirements.

C. Such services will include furnishing and paying for labor, materials, minor parts, and tools necessary to properly operate and maintain the existing generators and transfer switches, including but not limited to overall inspection, oil sample, change and disposal of oil, batteries, fuel and filters, radiators cap, battery cable, anti-freeze, hoses and belts. Minor parts shall mean those parts costing less than $50.00 and major parts shall mean parts costing individually $50.00 or more as shown on the manufacturer's price list.

D. Only new standard parts manufactured by the maker of each unit or parts of equal quality shall be used. The CONTRACTOR will be furnished or compensated by the HPHA for any major parts or equipment replacement. The CONTRACTOR must maintain a running log checklist for each generator and transfer switch, recording the date of each operational and maintenance service work performed and who performed the work. The log book shall be kept in the generator room at the project site.

E. Generators and transfer switches may be added to or deleted from this Contract upon written notice from the HPHA Purchasing Office. The costs for additions will be consistent with similar costs for like service under this Contract.

1.02 SCOPE OF WORK

A. The work shall include the inspection and testing of units described in Section 3.01 EQUIPMENT SCHEDULE below. Each unit shall have one (1) annual and three (3) quarterly inspections each year. The inspection level for each visit is described herein.

INSPECTION REPORTS:

For each generator, a typewritten recorded log report containing all test results, technician's comments, and other pertinent information shall be completed. Equipment shall be identified in the report by manufacturer, model number and serial number. Applicable reports shall include "as-found" and "as-left" conditions. A copy of the technicians' field report shall be delivered to the HPHA within 10 days after completion of each service visit. Upon completion of each quarterly inspection, each annual inspection and the three year inspection, the completed reports for all generators and transfer switches listed in section 3.01, shall be compiled per project and bound together into a single document. The HPHA shall be furnished with two identical copies of this compiled report along with one electronic copy. An electronic copy shall be submitted on a CD in Microsoft Word format. The two bound inspection reports and one electronic report shall be submitted to the HPHA no later than ten days after completion of last inspection.

Inspection report for each generator shall be submitted with the quarterly invoices. Payments shall not be processed until the required records of each service visit are received by the HPHA's project Engineer.

B. Submit labor rates for repairs outside of the specific scope of work of this Contract the awarded vendor will be required to honor these rates. Repairs not exceeding a total of $500.00 may be performed with the written authorization of the HPHA's project engineer. Such repairs will be billed at the above labor rate with the material price not to exceed the vendor's actual cost plus 10%. The HPHA reserves the right to request documentation of the vendor's actual cost.

1.03 SCHEDULING

A. The units are located in various Oahu locations. Work shall be scheduled between 8:00 a.m. and 4:00 p.m. Monday through Friday. All work shall be scheduled at the HPHA's convenience and in cooperation with the HPHA's project engineer and area manager. Response to each emergency condition shall not exceed more than two (2) hours from the time it was called in by the HPHA. The CONTRACTOR shall provide priority to the HPHA on all the scheduled repairs.

B. Transfer switch load testing shall be scheduled through the HPHA's project engineer and area manager to insure certain critical loads are not interrupted.

C. The annual service work shall be completed within thirty days prior to the end of the 12-month period.

D. The first quarterly inspections shall occur within 80-100 days of the start of the 12-month period.

1.04 SAFETY

A. The CONTRACTOR in cooperation with the HPHA personnel shall develop and review a work plan in accordance with OSHA regulations for each day's work.

B. The CONTRACTOR shall take all necessary precautions to protect the public and tenants from injury resulting from its work.

C. The CONTRACTOR shall take whatever steps may be necessary to safeguard its work, the property of the HPHA as well as other individuals in the vicinity of the work area during the execution of this Contract. It shall be responsible for and make good on any and all damages and for losses to work or property caused by its or its employee's negligence.

1.05 STORAGE OF MATERIAL AND EQUIPMENT

A. The CONTRACTOR shall store materials and equipment at the jobsite only upon the approval of the HPHA Project Engineer. The HPHA shall not be responsible for the loss or damage of any materials and equipment stored on site.

1.06 REFERENCE STANDARDS

A. The work shall comply with the manufacturer's recommendations, these specifications, and the applicable National Electrical Manufacturers Association (NEMA), American National Standards Institute (ANSI) and American Society for Testing and Material (ASTM) standards. Work shall be carried out in compliance with applicable safety regulations.

B. All inspections shall conform to:

NFPA 110: Standard for Emergency and Stand-By Power Systems 1999 Edition, Table A6-3.1 (a) Maintenance Schedule

NFPA 111: Standard on Stored Electrical Energy Emergency and Stand-By Power Systems, 1999 Edition, entire book

NFPA 70B: Recommended Practice for Electrical Equipment Maintenance 1999 Edition, Sections 6-8.4, 14 and 22-2.5

NFPA 70 E: Standard for Electrical Safety Requirements for Employee Workplaces, 2000 Edition

2. REQUIREMENTS:

2.01 GENERAL:

A. The work described under any of the following sections shall not commence for any particular item of equipment until the testing and inspection plan has been discussed and with the HPHA's project engineer.

B. Variations from the following general procedures will be allowed if all tests, adjustments, cleaning and lubrication are accomplished.

C. This section refers to manufacturer's published instruction manuals for specific requirements for each item of equipment. The items included in this section are intended to indicate the required level of inspection, maintenance, and testing rather than specific procedures.

D. For all inspection, maintenance, and testing tasks, written notation(s) of condition found, condition left, and any action taken.

E. All replacement parts shall be Original Equipment Manufacturer (OEM) parts with the exception of certain belts, filters, fittings, and hoses, as long as a quality name brand part is used. Variations may be allowed with authorization of the HPHA's project engineer.

2.02 Specification for Services of Emergency Generators:

The Contractor shall submit a schedule of service for all emergency generators and shall maintain a log or record keeping system to document all gauge readings, problem, repairs, and maintenance performed on the equipment.

A. Quarterly Service: Before Starting Engine: The general operational and maintenance service shall be performed during each visit and shall include, but not be limited to, the following:

1. Engine Crankcase - Check Oil level, maintain oil level between the ADD and FULL marked on the engine stopped side of the oil level gauge.

2. Cooling System - Check coolant level. Maintain level within 1/2 inch to bottom of filter neck or proper level on sight gauge.

3. Walk-Around inspection - Inspect engine, radiator and generator for debris, loose or broken fittings, hoses or wires and guards. Repair as necessary.

4. Air Cleaner Indicator - Check the indicator. Change elements if indicator diaphragm remains in the locked position.

5. Battery Charger - Check for proper operation.

6. Fuel System - Check for leaks. Drain any water separator. Check fuel tank level. Check any fuel filter indicator.

7. Belts - Inspect for worn, broken or loose belts. Adjust if necessary.

8. Batteries - Clean top of batteries. Check electrolyte level (unless maintenance free). Check for loose connections. Measure and record specific gravity and voltage.

9. Block Heater - Check for proper operation. Maintain 90°F coolant temperature in the block at all times.

10. Governor - Check and maintain oil level.

11. Gauges - Check the condition of all gauges. Repair or replace any broken gauge.

12. Air System - Drain water; check air pressure.

13. Control Panel - Visually inspect; check for loose, broken or damaged wiring or components.

14. Generator - Check for moisture, dust, oil greases, and debris on main stator windings, exciter, and PMG. Clean as needed.

B. Quarterly Service: With Engine Running

1. Start the Engine - The following operational checks are intended to check the generator operation and the engine starting, lubricating and fuel systems as well as overall operation.

2. Oil Pressure Gauge - Check for proper operating oil pressure. Refer to the Operation and Maintenance guide for the correct pressure reading.

3. Fuel Pressure Gauge - Check for proper operating fuel pressure. Refer to the Operation and Maintenance guide for the correct pressure reading.

4. Engine Crankcase - Check the oil level; maintain the oil level between the ADD and FULL marks on the "Engine Running" side of the dipstick.

5. Frequency (rpm) and Generator Voltage - Check and record readings.

6. Generator Louvers - Check for proper operation (able to open and close freely).

7. Generator Air Inlet Filter - If differential pressure exceeds 0.6 inches of water, stop the engines and clean the elements by soaking in hot water with detergent. Rinse with clear water. Recharge the elements with a thin layer of light weight machine oil (WD-40 or equivalent).

8. Leaks and Noises - Check for leaks and unusual noises. Replace muffler as needed.

9. Main Stator Winding Temperature with Winding Defectors - Check and record main stator winding temperatures with engine under load.

10. Bearing Bracket Temperature - Check and record bearing bracket temperature with the engine under load.

C. Quarterly Service: After Stopping the Engine

1. Automatic Switches - Check that all switches are in proper position for automatic start.

2. Exhaust Rain flap free movement, closes properly. Treat & paint for rust.

3. Fuel Tank - Check the fuel level; refill if below 75% full.

4. Battery Charger - Record charging amperage reading.

5. Malfunctions - Report any malfunction and make necessary repairs.

D. Annual Service: Before Starting the Engine

1. Perform all Quarterly Service Before Starting the Engine maintenance procedures first.

2. Walk-Around Inspection - Inspect engine, radiator and generator for debris, loose or broken fittings, hoses or wires and guards. Repair as necessary.

3. Cooling System – Sample coolant solution. Drain, clean, and flush if necessary and replace thermostat. Proper dispose of coolant solution. Refill with coolant solution and conditioner. Maintain level within 1/2 inch to bottom of filter neck or proper level on sight gauge. Replace any coolant element or add liquid coolant conditioner.

4. Fuel System - Drain water and sediment from tank. Change fuel filters.

5. Air Cleaner Element - Inspect and clean or replace element.

6. Governor - Check and maintain required oil level.

7. Engine Crankcase - Check oil level. Maintain oil level between the ADD and FULL mark on the "Engine Stopped" side of the dipstick.

8. Crankcases Breather - Clean.

9. Valve Lash - Check, adjust if necessary. Refer to the engine Service Manual for proper procedure and settings.

10. Linkages - Check and adjust all linkages, if necessary. Lubricate all linkage fittings with MPGM grease.

11. Engine Protective Devices - Check; test for proper operation.

12. Batteries Clean top of batteries. Check electrolyte level (unless maintenance free). Check for loose connections. Measure and record specific gravity and voltage. Replace as necessary to meet generator requirements. Proper dispose of battery.

13. Hoses and Belts – Check and replace as necessary.

14. Engine - Wipe down; clean as needed. Inspect generator bearing and bracket. Lubricate generator bearing; refer to Generator Service Manual.

15. Generator - Check for moisture, dust, oils, greases and debris on main stator windings, exciter, and PMG. Clean as needed. Check generator windings with megohmmeter and record reading for reference.

16. Generator Bearing - Inspect generator bearing and bracket. Lubricate generator bearing. Refer to Generator Service Manual.

17. Turbocharger – Inspect for proper operation. Check the end play and radial clearance on the turbine wheel and shaft.

18. Refer to the Generator Service Manual for information relating to use of the megohmmeter and low resistance readings.

E. Annual Service: With Engine Running

1. Perform all Quarterly Service With Engine Running maintenance procedures first.

2. Start the Engine - Operate the engine and check all gauges, oil pressure, fuel pressure, rpm (frequency), generated voltage and engine jacket water temperature, for correct readings.

3. Engine Crankcase - Check the oil level. Maintain the oil level between the ADD and FULL mark on the "Engine Running" side of the dipstick.

4. Generator Louvers - Check for proper operation (able to open and close freely).

5. Exhaust System – Check for leaks and unusual noises. NOTE: Engine must be stopped before making necessary repairs.

6. Generator Air Inlet Filter - If differential pressure exceeds 0.6 inches of water, stop the engine and clean the elements by soaking in hot water with detergent. Rinse with clean water. Recharge the elements with a thin layer of light weight machine oil (WD-40 or equivalent).

7. Engine Mounts - Inspect for proper installation and loose fasteners. Check for proper torque.

8. Leaks and Noises - Check for leaks and unusual noises. NOTE: the engine must be stopped before making necessary repairs.

9. Load Test - Load the engine to the full rated load. Operate at this level for minimum of two hours. After approximately one hour, record the reading of all gauges: oil pressure, fuel pressure, oil level, rpm (frequency), generated voltage, service meter, engine jacket water temperature, exhaust temperature and manifold vacuum. Engine slobbering can occur if the load testing is not conducted.

10. Main Stator Winding Temperature with Winding Detectors - Check and record main stator winding temperatures with engine under load. NOTE: Normal temperature values for stand by units are 356°F for the alarm and 401°F for the shutdown.

11. Bearing Bracket Temperature - Check and record bearing bracket temperature with the engine under load. NOTE: Normal temperature values for the bearing bracket are 185°F for the alarm and 203°F for the shut down.

F. Annual Service: After Stopping the Engine

1. Perform all Quarterly Service After Stopping the Engine maintenance procedure first.

2. Walk-Around Inspection - Repair or adjust. Make repairs or adjustments to the engine and generator set as necessary. Report any malfunction and make necessary repairs.

3. Schedule Oil Sampling (S.O.S) - Obtain sampling for analysis.

4. Engine Oil and Filter(s) - Change oil. Replace filter(s), cut old filter open and inspect for foreign material. Properly dispose of oil and oil filters.

5. Generator Air Inlet Filter - Remove the filter elements and soak in hot water with detergent until clean. Rinse with clean water. Recharge the elements with a thin layer of light weight machine oil (WD-40 of equivalent).

6. Coolant Analysis – Obtain sample for analysis. Replace if necessary.

7. Fuel Tank - Check the fuel level; refill if below 75% full.

8. Battery Charger - Record charging amperage and voltage readings.

9. Automatic Switches - Check that all switches are in proper position for automatic start.

3.01 EQUIPMENT SCHEDULE:

A. GENERATOR INFORMATION
[See Appendix A for additional information]

1. Kalakaua Homes: 1583 Kalakaua Ave. Honolulu, HI 96826 CATERPILLAR, Model 3208, Diesel, 100 KW, 480 V, 3 PH

2. Kalanihuia: 1220 Aala St. Honolulu, HI 96817 KMAG 18, Model 100SX9E, Diesel, 100 KW, 208/120 V, 3Ph.

3. Makua Alii: 1541 Kalakaua Ave. Honolulu, HI 96826 KMAG, Model 100SX9E, Diesel, 100 KW, 208/120 V, 3Ph.

4. Paoakalani: 1545 Kalakaua Ave. Honolulu, HI 96826 KMAG 18, Model 75SX9E, Diesel, 90 KW, 208/120 V, 3Ph.

5. Pumehana: 1212 Kinau St. Honolulu, HI 96814 KMAG 18, Model 60SX9E, Diesel, 75 KW, 208/120 V, 3Ph.

6. Punchbowl Homes: 730 Captain Cook Ave. Honolulu, HI 96813 KMAG 18, Model 60SX9E, Diesel, 75 KW, 208/120 V, 3Ph.

7. Hale Poai: 1001 N. School Street, Honolulu, HI 96817 KMAG, Model 100SX9E, Diesel, 100 KW, 208/120 V, 3Ph.

8. Ho'olulu: 94-943 Kau'olu PI. Waipahu, HI 96797 GENERAC, Model 94401454-S, Diesel, 100 KW, 208/120 V, 3Ph.

9. Kamalu: 94-941 Kau'olu PI. Waipahu, HI 96797. GENERAC, Model 2A 02266-S, Diesel, 125 KW, 208/120 V, 3Ph.

10. La'iola Building A & B: 1 & 15 Ihoiho PI. Wahiawa, HI 96786 CATERPILLAR, Model 3208, Diesel, 75 KW, 208 V, 3 PH

B. Notification of the HPHA Staff and Residents

When necessary, the Contractor shall notify the Area Manager at least 72 hours in advance of any work that would produce excessive noise or may produce utility outages.

3.02 CLEAN-UP:

At completion of each operational and/or maintenance service or emergency service, the Contractor shall clean up and remove all rubbish, grease and debris from the premises resulting from this work, and shall keep the entire area clean and neat.

END OF SECTION

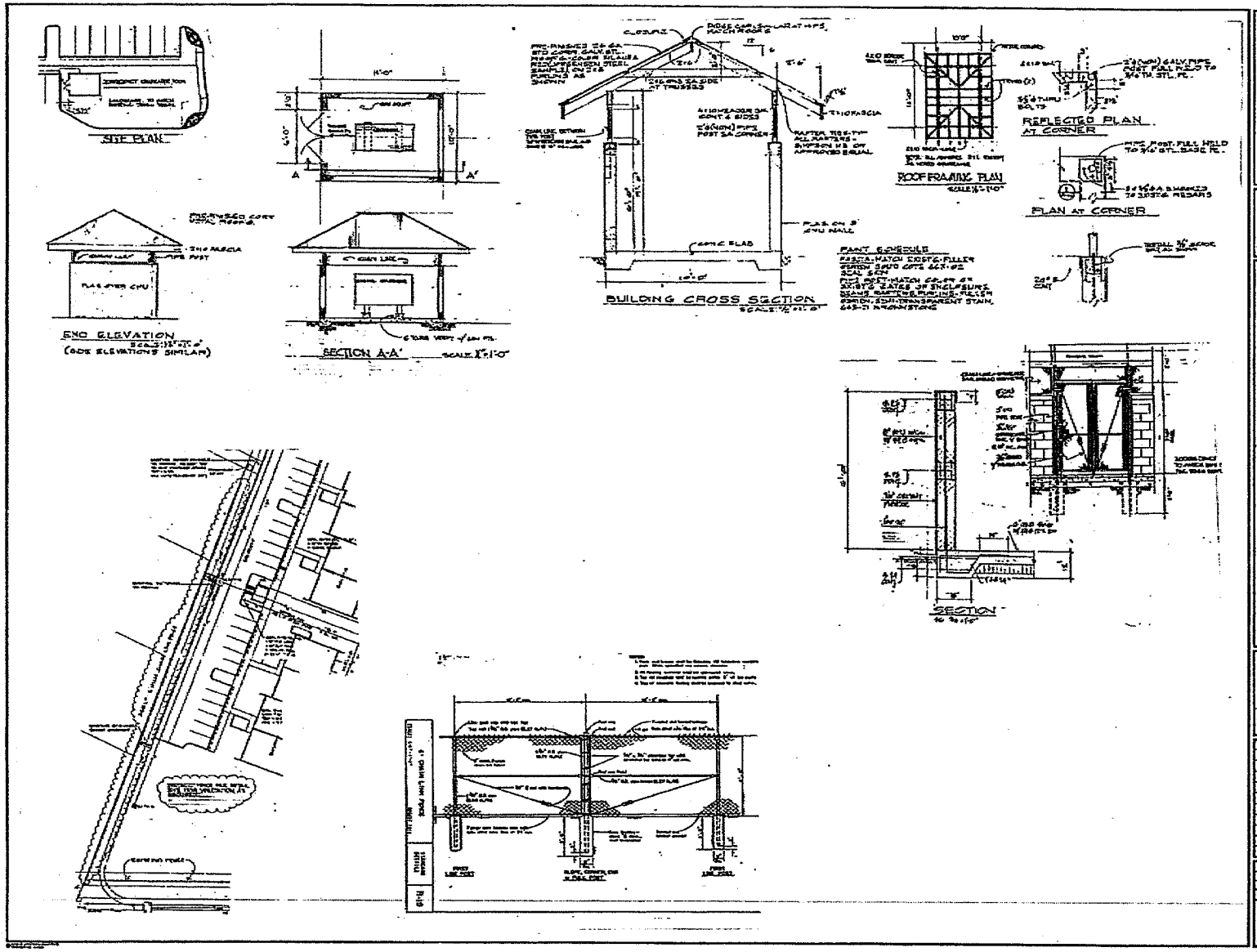

AHL/MITSUNAGA & ASSOCIATES, INC.

HONOLULU HAWAII

MID-RISE RUBLIC HOUSING

HAWAII HOUSING AUTHORITY

EMERGENCY GENERATOR ROOM

ADDITIONAL FENCING

Revisions

Designed by

Drawn by

Project No.

Date

Sheet No.

A6-7

of Sheets

Copyright 1981

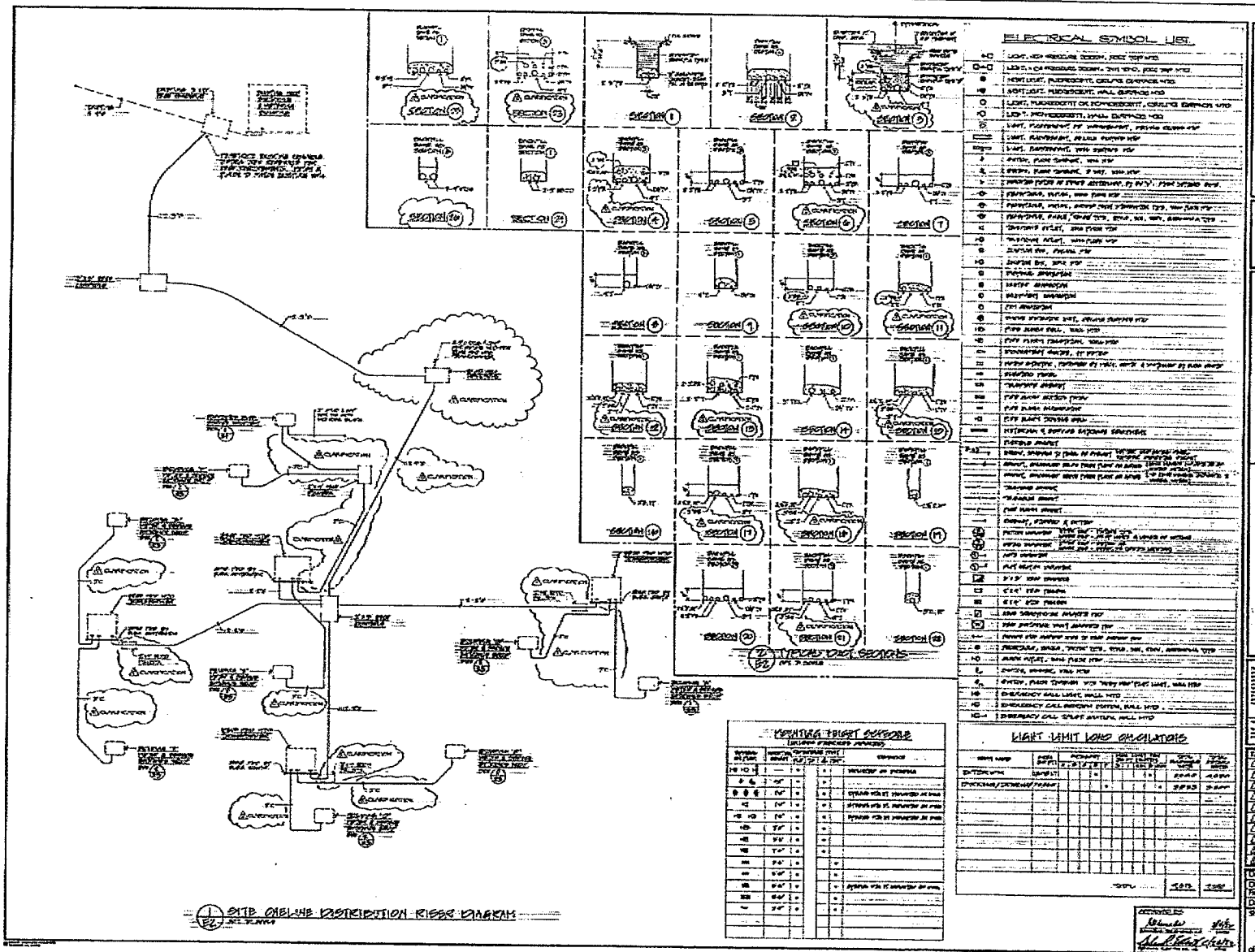
ELECTRICAL SYMBOL LIST
LIGHT LIMIT LOAD CALCULATIONS
SITE DISTRIBUTION ONE LINE DIAGRAM
AHL/MITSUNAGA & ASSOCIATES, INC.
HONOLULU
HAWAII
LOW-RISE PUBLIC HOUSING
HAWAII HOUSING AUTHORITY
PROJECT HI10-P001-062
HONOLULU
HAWAII
Revision
Designed by
Drawn by
Date
Sheet No.
E2
of 27 Sheets
Copyright © 1981

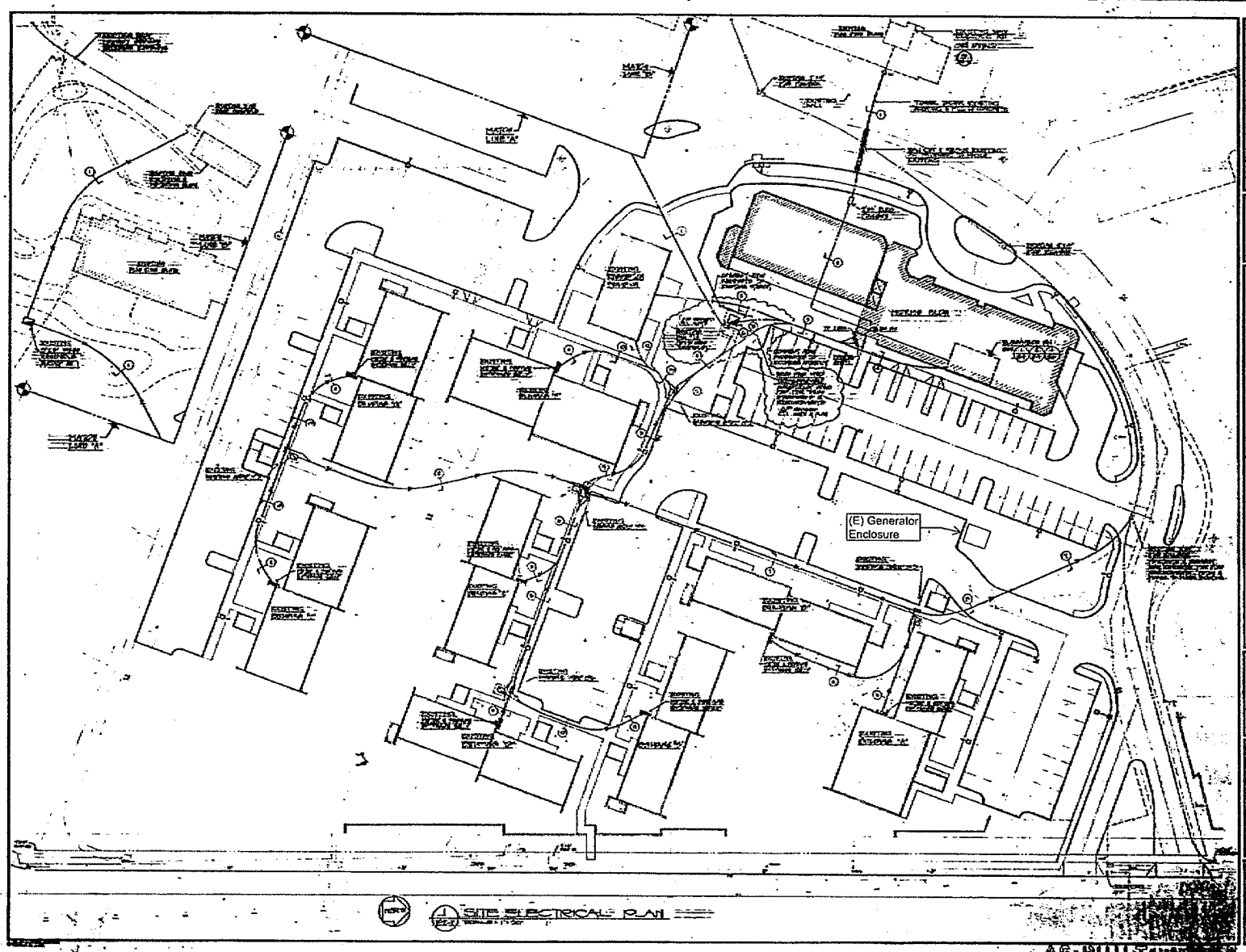

AHL/MITSUNAGA & ASSOCIATES, INC.
HONOLULU HAWAII

MID-RISE PUBLIC HOUSING
HAWAII HOUSING AUTHORITY
PROJECT: HI10-P001-062
HONOLULU HAWAII

SITE ELECTRICAL PLAN

Sheet No. E2-1

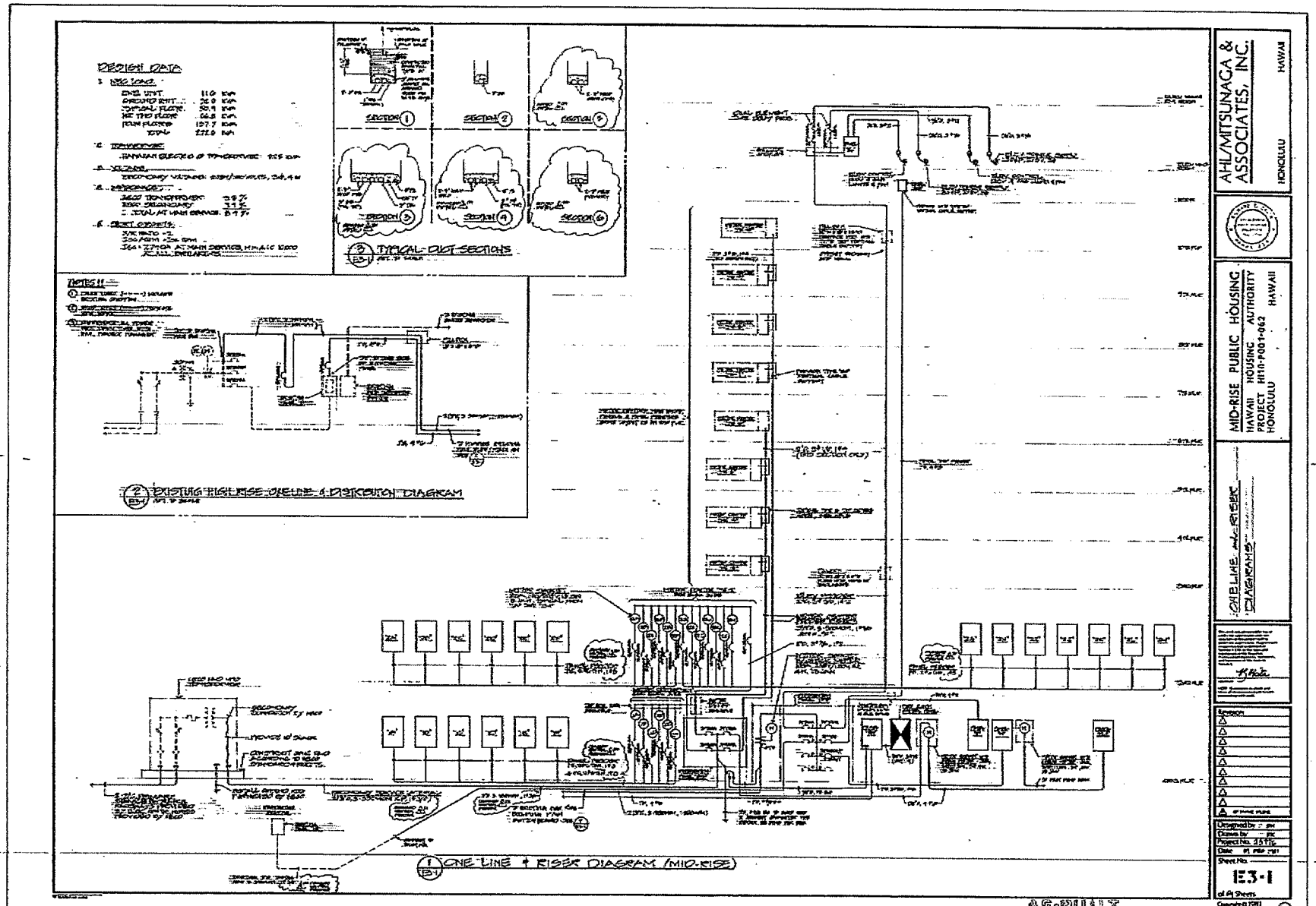
DESIGN DATA
TYPICAL DIOT SECTIONS
EXISTING HIGH-RISE ONE-LINE & DISTRIBUTION DIAGRAM
ONE-LINE & RISER DIAGRAMS
ONE-LINE & RISER DIAGRAM (MID-RISE)
AHL/MITSUNAGA & ASSOCIATES, INC.
HONOLULU
HAWAII
MID-RISE PUBLIC HOUSING
HAWAII HOUSING AUTHORITY
PROJECT HI10-P001-062
HONOLULU
HAWAII
E3-1
AS-BUILT
AS BUILT DRAWING

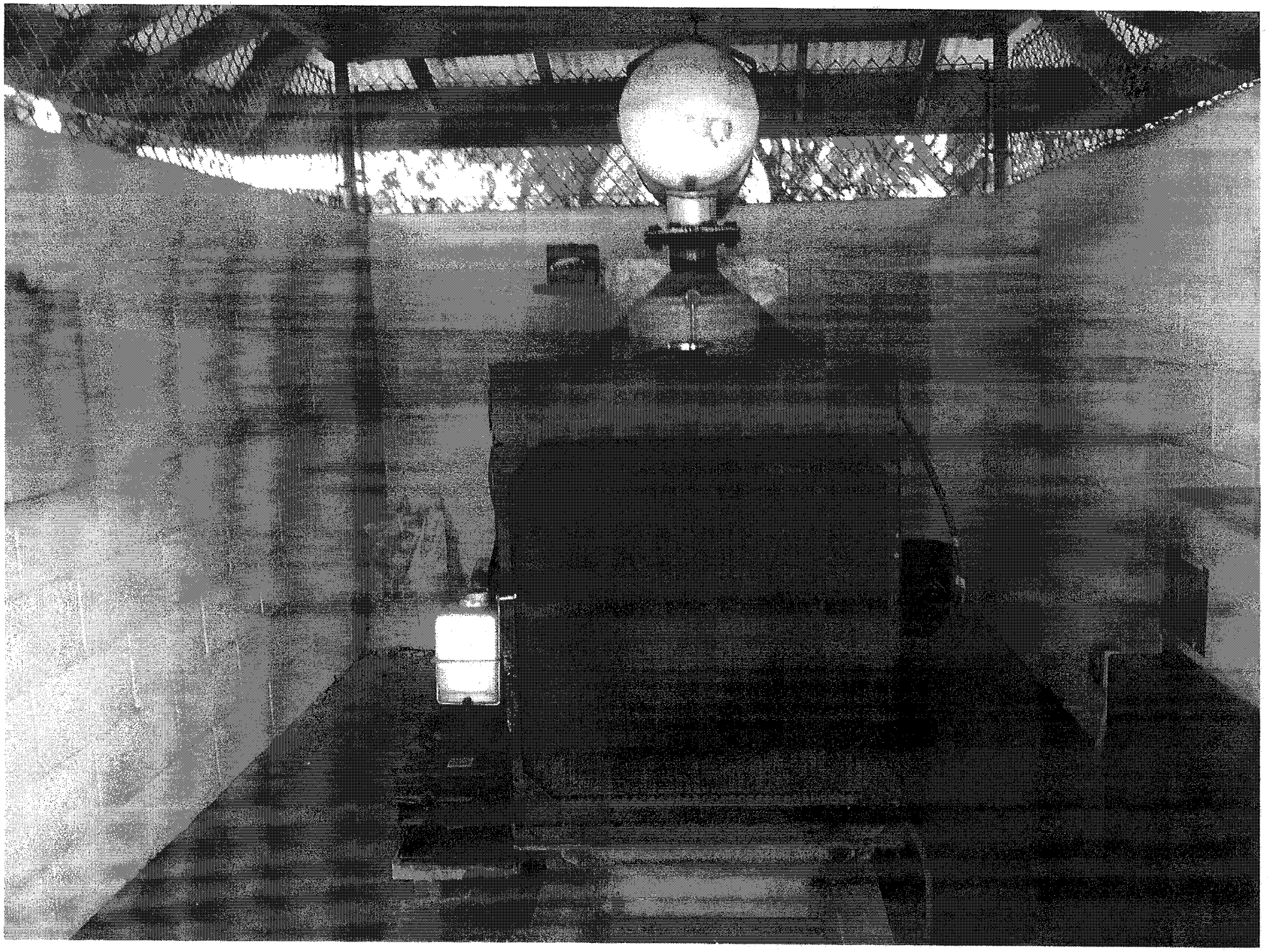

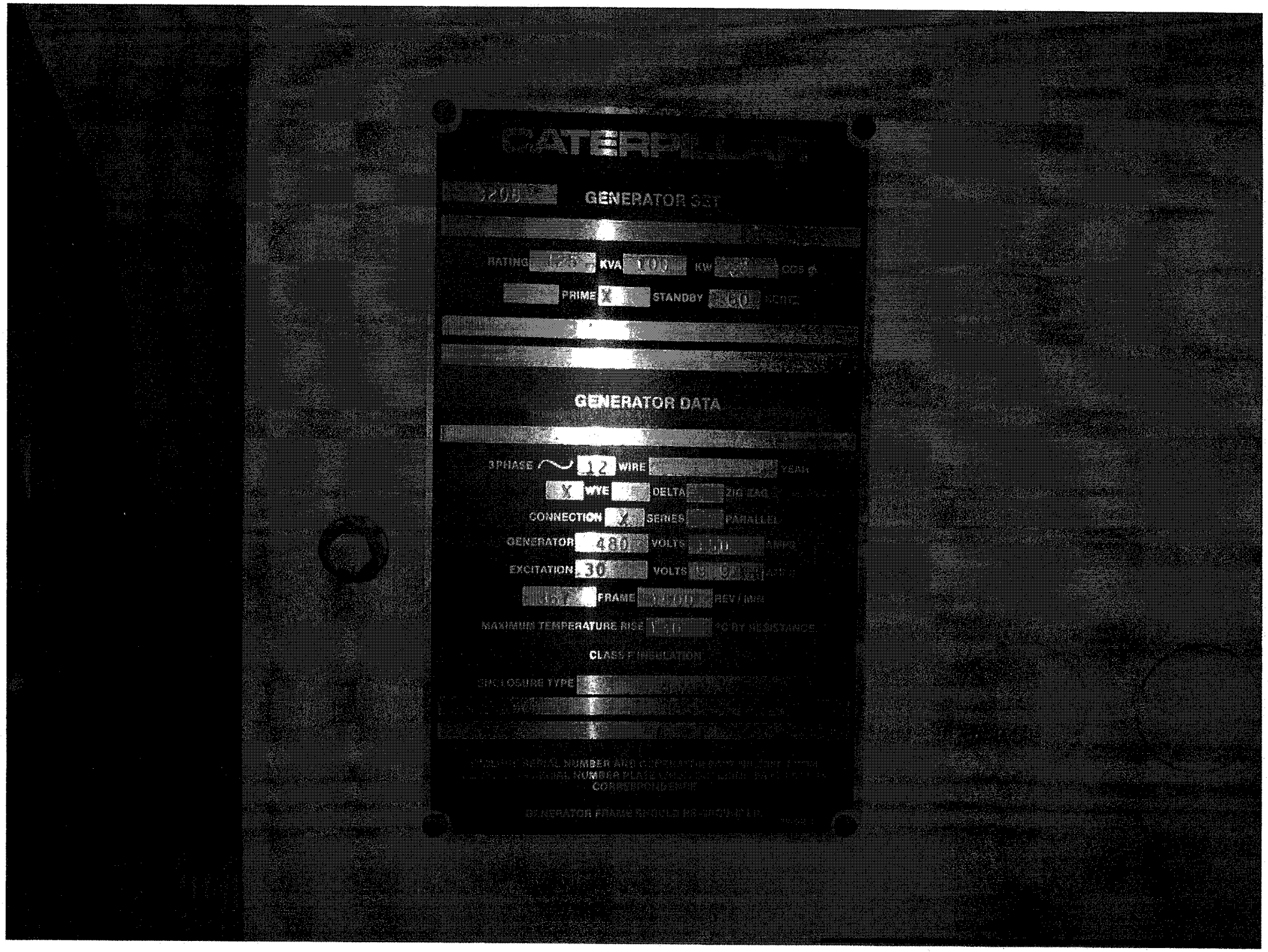
GENERATOR SET
RATING
KVA
100
KW
PRIME
X
STANDBY
GENERATOR DATA
3PHASE
12
WIRE
WYE
DELTA
CONNECTION
SERIES
PARALLEL
GENERATOR
480
VOLTS
EXCITATION
30
VOLTS
FRAME
MAXIMUM TEMPERATURE RISE
CLASS F INSULATION
CORRESPONDENCE

APPENDIX A1: AMP 34

A1.2: Makua Ali'i

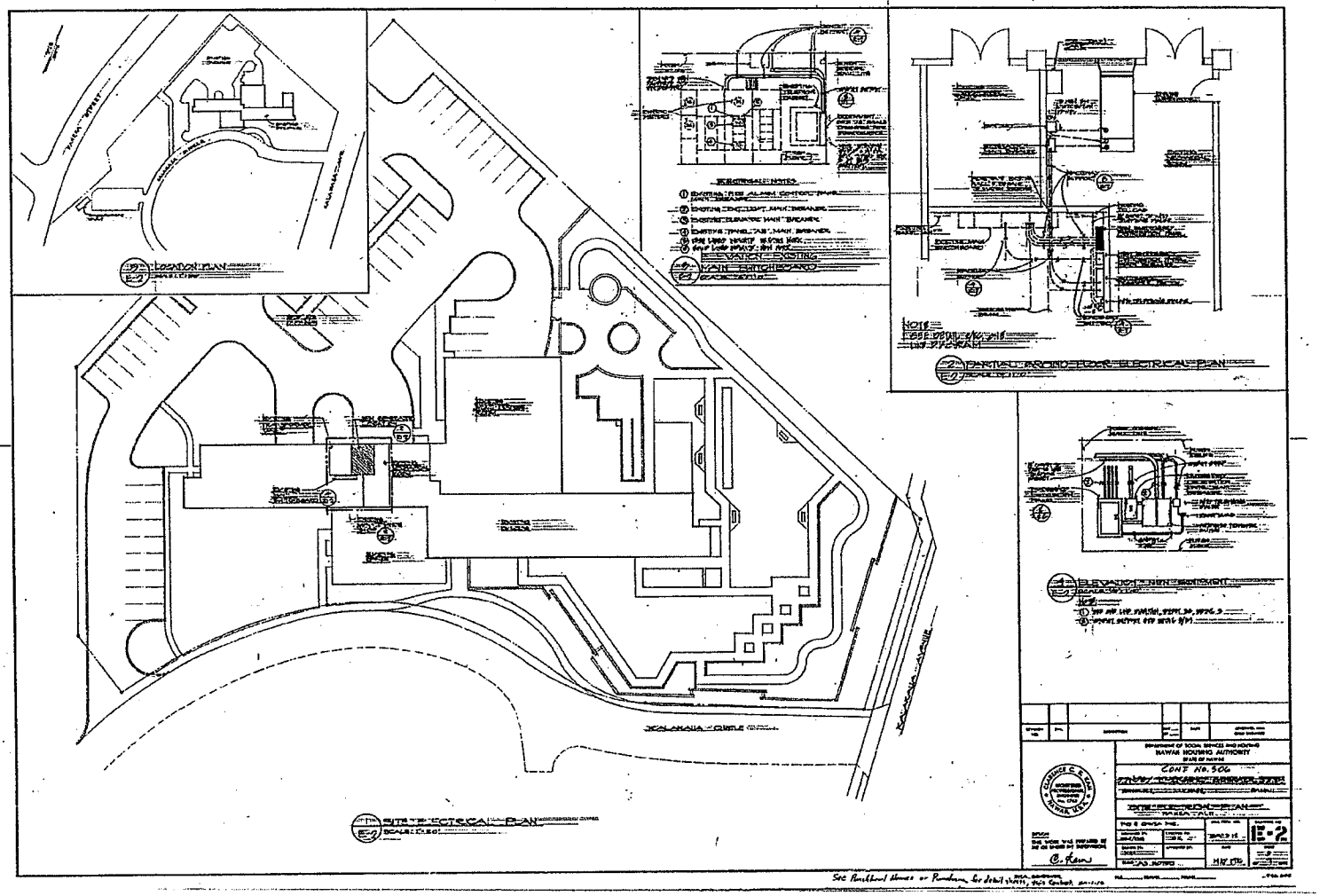

LOCATION PLAN
MAIN SWITCHBOARD
PARTIAL GROUND FLOOR ELECTRICAL PLAN
ELEVATION - NEW EQUIPMENT
SITE ELECTRICAL PLAN
KALAKAUA AVENUE
DEPARTMENT OF SOCIAL SERVICES AND HOUSING
HAWAII HOUSING AUTHORITY
STATE OF HAWAII
CONT NO. 506
E-2

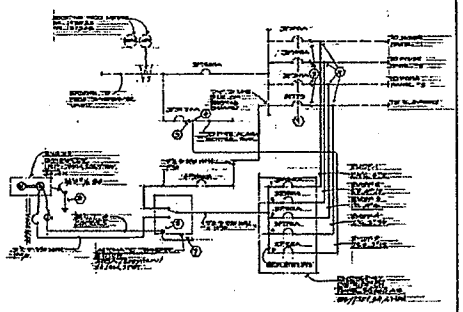

ONE LINE DIAGRAM - PUNCHBOWL

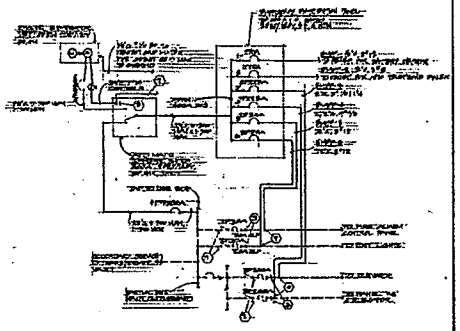

ONE LINE DIAGRAM - MAKIKI TOWER

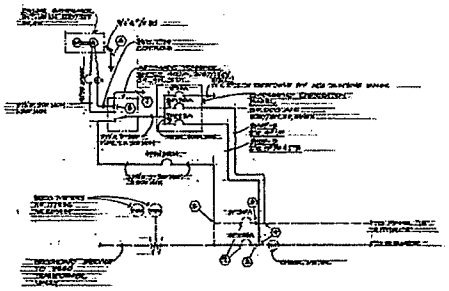

ONE LINE DIAGRAM - KALIHI VA

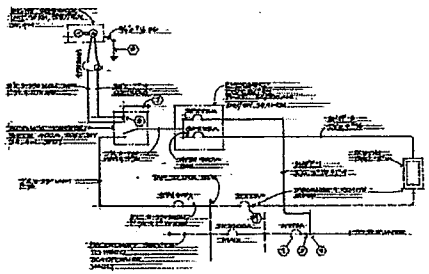

ONE LINE DIAGRAM - PACIFIC PALISADES

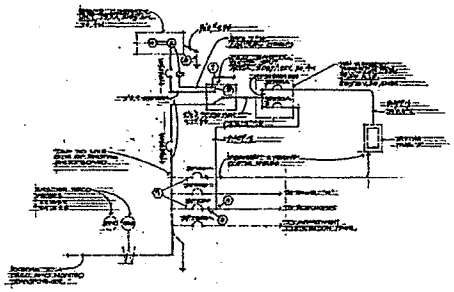

ONE LINE DIAGRAM - PUMEHANA

GENERAL ELECTRICAL NOTES

1. [illegible]
2. [illegible]
3. [illegible]
4. [illegible]
5. [illegible]
6. [illegible]
7. [illegible]
8. [illegible]
9. [illegible]
10. [illegible]

SCHEDULE OF CONT. FAILURES

[illegible]	[illegible]	[illegible]	[illegible]	[illegible]	[illegible]
[illegible]	[illegible]	[illegible]	[illegible]	[illegible]	[illegible]

[illegible]	[illegible]	[illegible]	[illegible]	[illegible]

DEPARTMENT OF PUBLIC WORKS AND HOUSING
HAWAII HOUSING AUTHORITY
STATE OF HAWAII

CONT. No. 506

CONDO. [illegible] REPAIRS - [illegible]

ONE LINE DIAGRAMS

[illegible]

[illegible]

[illegible]

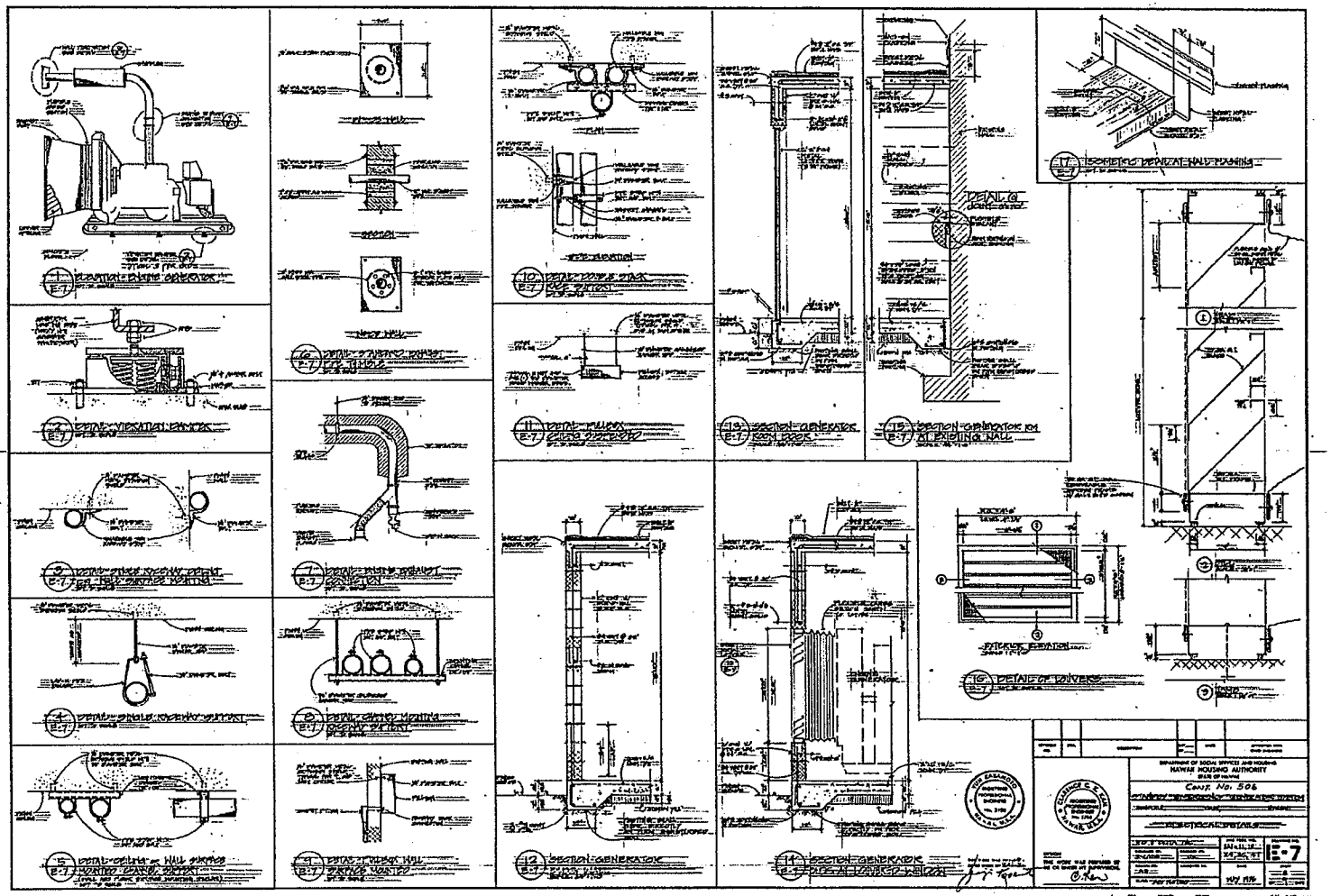

1 ELEVATION-ENGINE GENERATOR
E-7
2 DETAIL-VIBRATION DAMPER
E-7
3 DETAIL-STAGE RACEWAY DETAIL
E-7
4 DETAIL-SINGLE RACEWAY SUPPORT
E-7
5 DETAIL-CEILING & WALL SURFACE MOUNTED CLAMP SUPPORT
E-7
6 DETAIL-STANDARD DAMPER
E-7
7 DETAIL-ENGINE EXHAUST CONNECTION
E-7
8 DETAIL-CLAMP MOUNTING RACEWAY SUPPORT
E-7
9 DETAIL-FLUSH WALL SURFACE MOUNTED
E-7
10 DETAIL-DOUBLE STACK
E-7
11 DETAIL-FLUSH CEILING SUSPENDED
E-7
12 SECTION-GENERATOR
E-7
13 SECTION-GENERATOR ROOM DOOR
E-7
14 SECTION-GENERATOR SLIDE AT LOUVERED WINDOW
E-7
15 SECTION-GENERATOR RM AT EXISTING WALL
E-7
16 DETAIL OF LOUVERS
E-7
17 SOMETHING DETAIL AT WALL FLASHING
E-7
DEPARTMENT OF SOCIAL SERVICES AND HOUSING
HAWAII HOUSING AUTHORITY
STATE OF HAWAII
CONT. NO. 506
ELECTRICAL DETAILS
E-7

KATO
A. C. GENERATOR
PART NUMBER
SERIAL NUMBER
IMPORTANT: WHEN ORDERING PARTS ALWAYS
INCLUDE PART NUMBER AND SERIAL NUMBER
ALTERNATOR
MODEL OR CODE NO.
TYPE OR DESIGN NO.
15241
CONTINUOUS
STANDBY
KW.
100
VOLTS
120/208
DESIGN AMBIENT
K.V.A.
125
AMPS
347
INSULATION CLASS
PHASE
HZ (CPS)
R.P.M.
PF
ALT. FIELD AMPS
ALT. FIELD VOLTS
ALTERNATOR
EXCITER
FIELD NO.
DESIGN OR TYPE NO.
EXC. FIELD VOLTS
EXC. FIELD AMPS
KATO ENGINEERING COMPANY — MANKATO MINNESOTA U.S.A.

APPENDIX A1: AMP 34

A1.3: Paoakalani

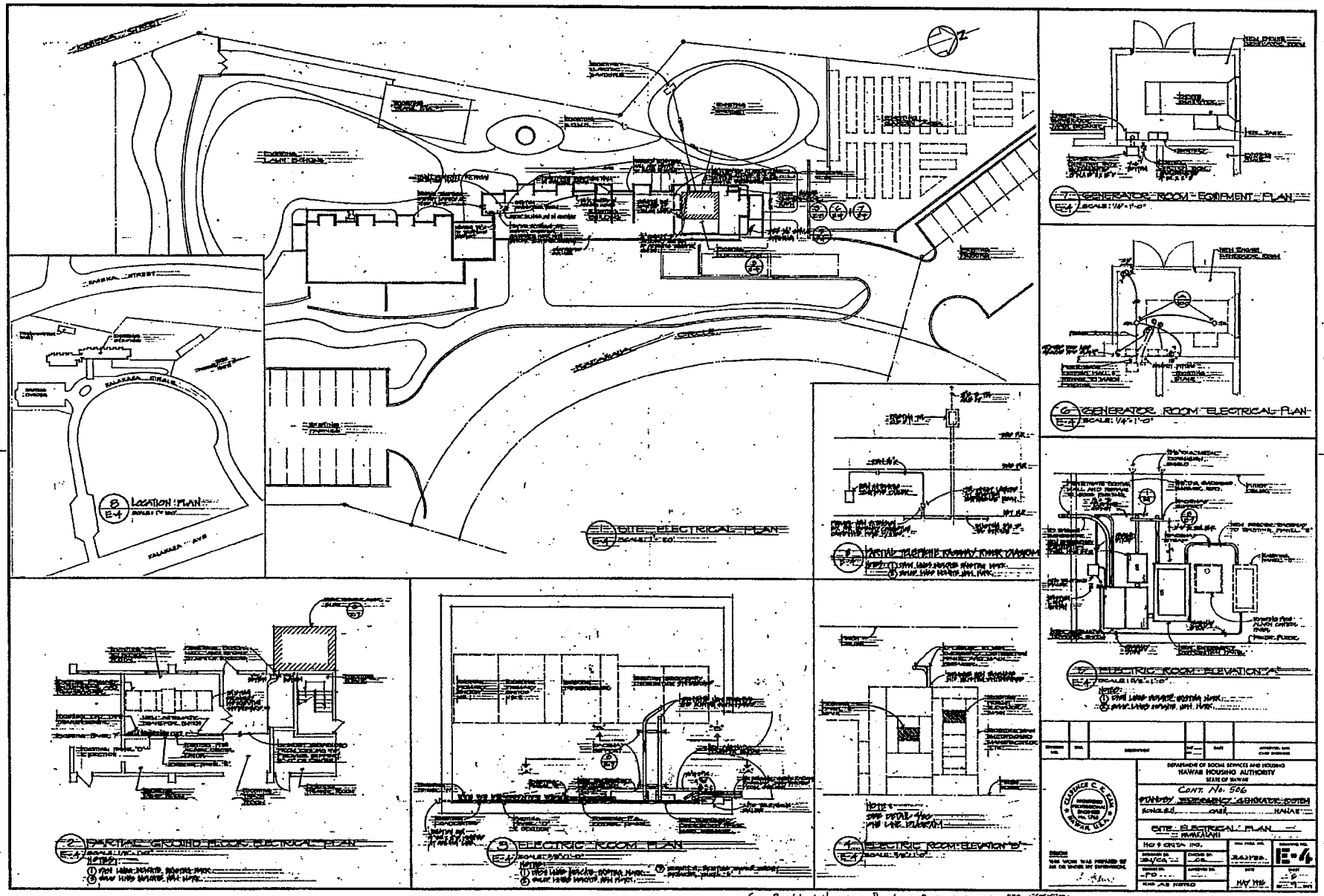

See Punchbowl Homes or Punchbowl for detail sheets, this contract.

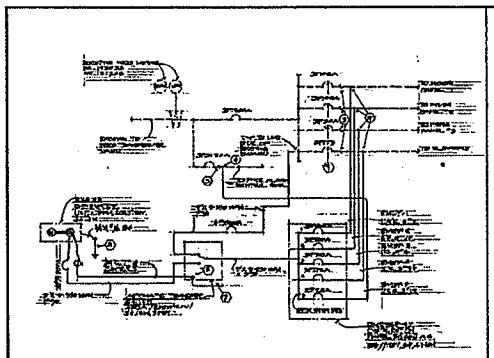

1 ONE LINE DIAGRAM - PINCHBONL

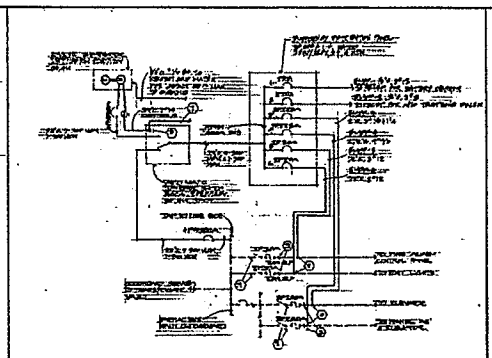

2 ONE LINE DIAGRAM - MAKIA ALI

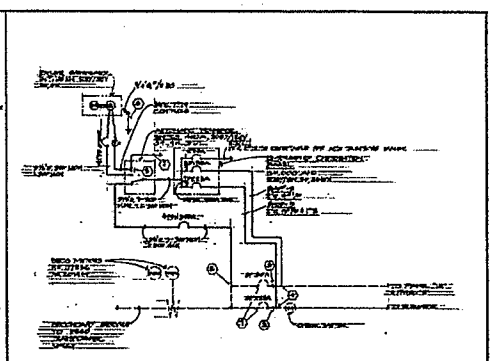

3 ONE LINE DIAGRAM - KALANIHULA

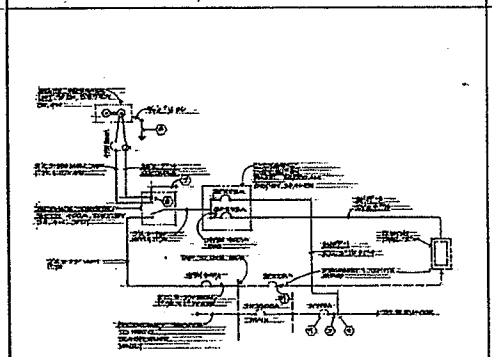

4 ONE LINE DIAGRAM - PICHKALANI

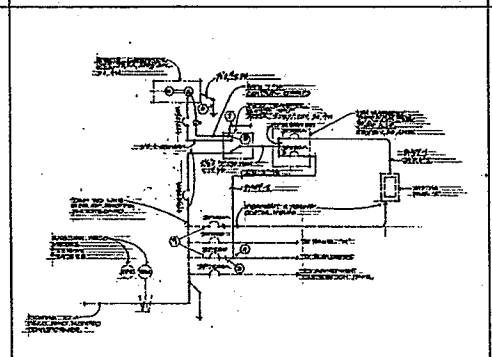

5 ONE LINE DIAGRAM - PIMENANA

GENERAL ELECTRICAL NOTES

1. DASH LINES INDICATES EXISTING WORK
2. SOLID LINES INDICATES NEW WORK
3. DISCONNECT & REMOVE EXISTING PERMIT CLIENT
4. CONNECT NEW PERMIT CLIENT TO EXISTING
5. DAY TO LINE SIZE, AS EXISTING WILL SPECIFIED
6. [illegible]
7. [illegible]
8. [illegible]
9. [illegible]

EXTENT OF LIGHT FIXTURES

[illegible]	[illegible]	[illegible]	[illegible]	[illegible]	[illegible]
A			[illegible]	[illegible]	[illegible]

DEPARTMENT OF SOCIAL SERVICES AND HOUSING
HAWAII HOUSING AUTHORITY
STATE OF HAWAII

CONT. NO. 506

[illegible]

ONE LINE DIAGRAMS

THIS WORK WAS PREPARED BY ME OR UNDER MY SUPERVISION

[illegible]

E-6

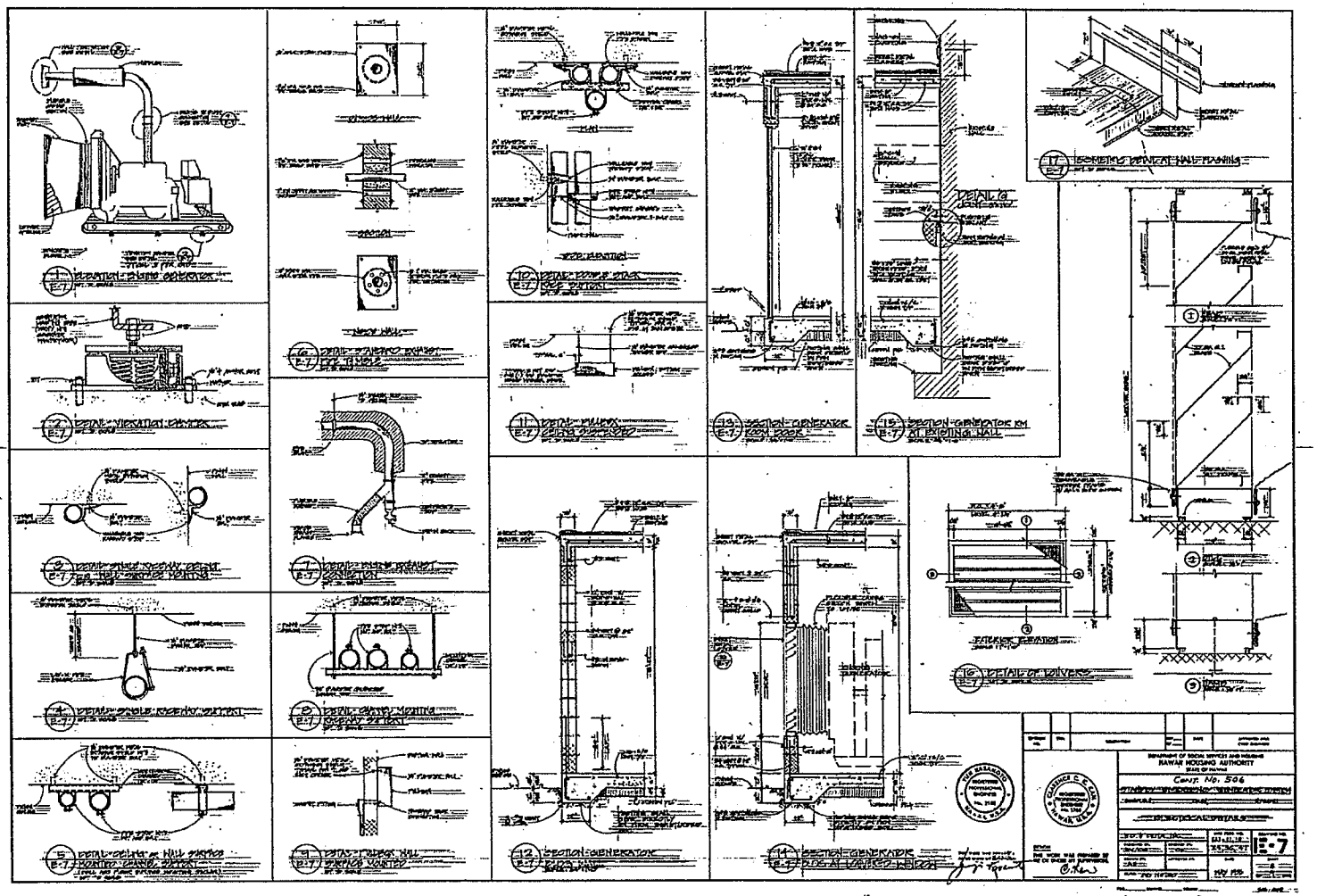

1 ELEVATION - ENGINE GENERATOR
2 DETAIL - VIBRATION DAMPER
3 DETAIL - SINGLE RACEWAY OPENING
4 DETAIL - SINGLE RACEWAY SUPPORT
5 DETAIL - CEILING OR HALL SURFACE MOUNTED CHANNEL SUPPORT
6 DETAIL - STANDARD EXHAUST PIPE TUMBLE
7 DETAIL - EXHAUST CONNECTION
8 DETAIL - CHANNEL MOUNTING RACEWAY SUPPORT
9 DETAIL - FULLER HALL SURFACE MOUNTED
10 DETAIL - DOUBLE STACK PIPE SUPPORT
11 DETAIL - FULLER CEILING SUSPENDED
12 SECTION - GENERATOR
13 SECTION - GENERATOR ROOM DOOR
14 SECTION - GENERATOR BLDG AT LOWERED HEADER
15 SECTION - GENERATOR RM AT EXISTING HALL
16 DETAIL OF LOUVERS
17 SCHEMATIC DETAIL AT HALL FLASHING
DETAIL G
FATERIOR ELEVATION
DEPARTMENT OF SOCIAL SERVICES AND HOUSING
HAWAII HOUSING AUTHORITY
STATE OF HAWAII
Const. No. 506
E-7

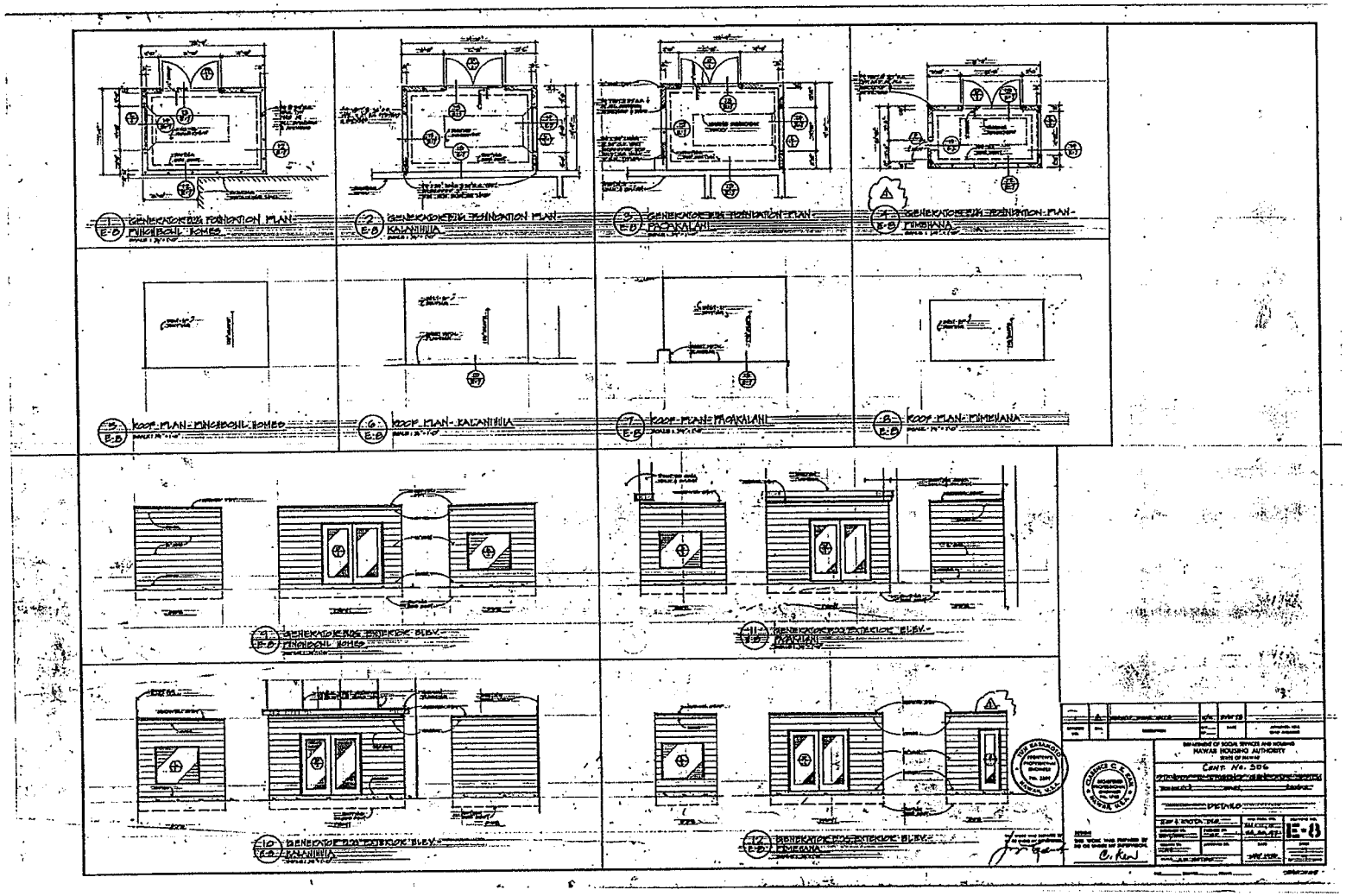
1 E-8 GENERATOR BLDG FOUNDATION PLAN-PUNCHBOWL HOMES
2 E-8 GENERATOR BLDG FOUNDATION PLAN-KALANIHUIA
3 E-8 GENERATOR BLDG FOUNDATION PLAN-PACAKALANI
4 E-8 GENERATOR BLDG FOUNDATION PLAN-PUMEHANA
5 E-8 ROOF PLAN-PUNCHBOWL HOMES
6 E-8 ROOF PLAN-KALANIHUIA
7 E-8 ROOF PLAN-PACAKALANI
8 E-8 ROOF PLAN-PUMEHANA
9 E-8 GENERATOR BLDG EXTERIOR ELEV.-PUNCHBOWL HOMES
11 E-8 GENERATOR BLDG EXTERIOR ELEV.-PACAKALANI
10 E-8 GENERATOR BLDG EXTERIOR ELEV.-KALANIHUIA
12 E-8 GENERATOR BLDG EXTERIOR ELEV.-PUMEHANA
DEPARTMENT OF SOCIAL SERVICES AND HOUSING
HAWAII HOUSING AUTHORITY
STATE OF HAWAII
CONT. NO. 306
DETAILS
E-8

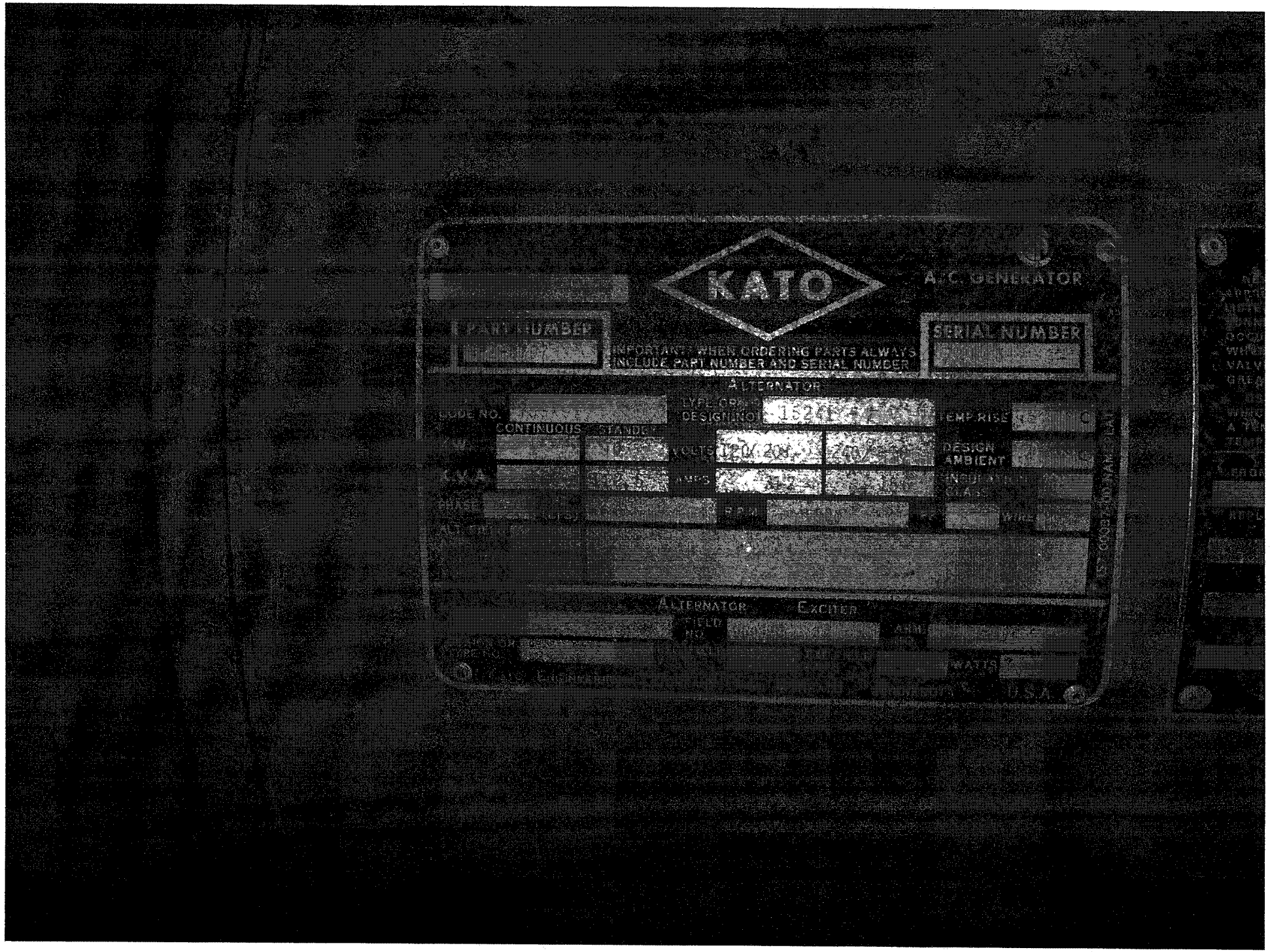
KATO
A.C. GENERATOR
PART NUMBER
SERIAL NUMBER
IMPORTANT: WHEN ORDERING PARTS ALWAYS INCLUDE PART NUMBER AND SERIAL NUMBER
ALTERNATOR
CODE NO.
TYPE OR DESIGN NO.
TEMP RISE
CONTINUOUS
STANDBY
VOLTS
DESIGN AMBIENT
KVA
AMPS
INSULATION CLASS
R.P.M.
WIRE
ALTERNATOR
EXCITER
FIELD NO.
ARM
WATTS
U.S.A.

APPENDIX A2: AMP 35

APPENDIX A2: AMP 35

A2.1: Kalanihuia

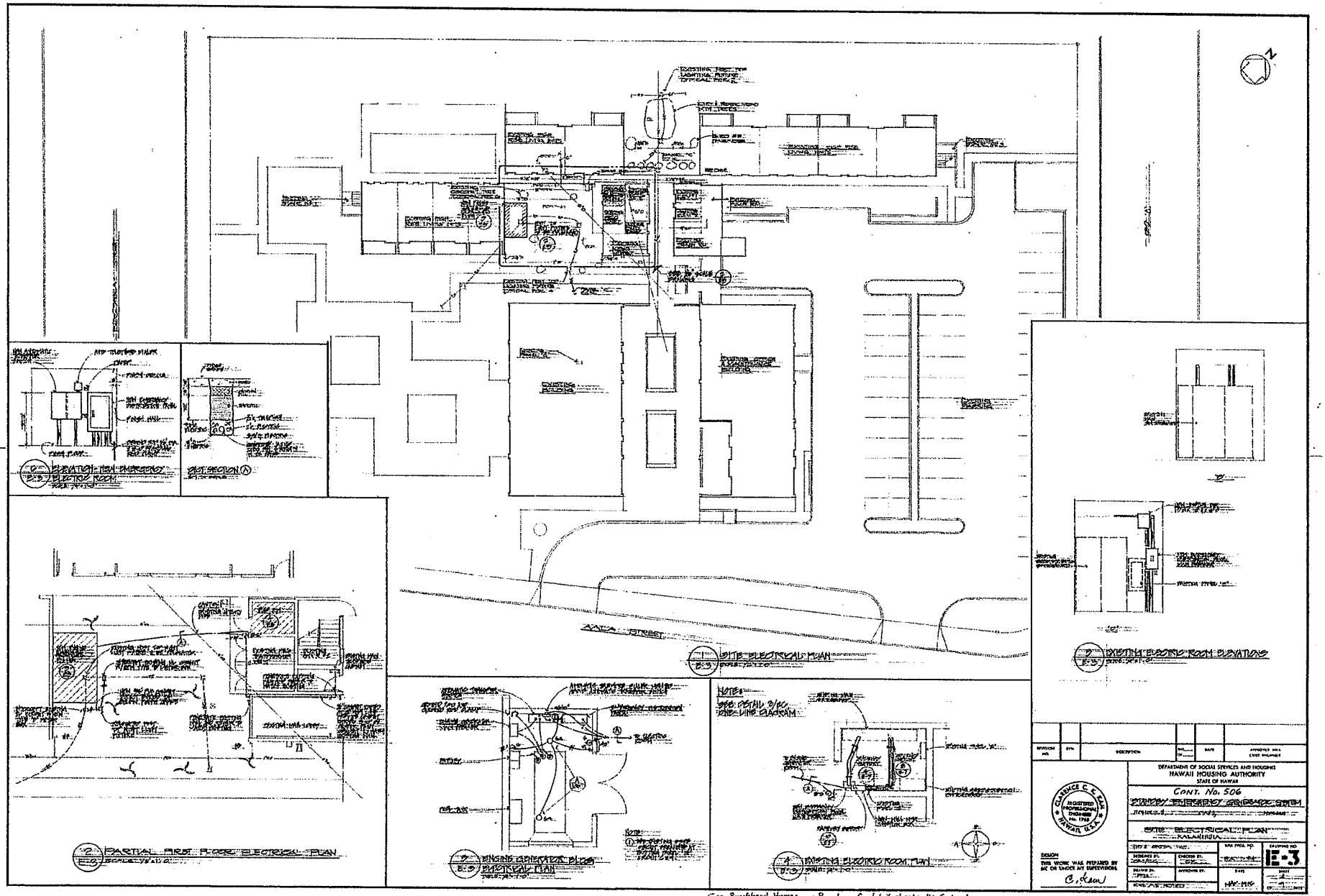

See Punchbowl Homes or Pamehana for detail sheets, this Contract.

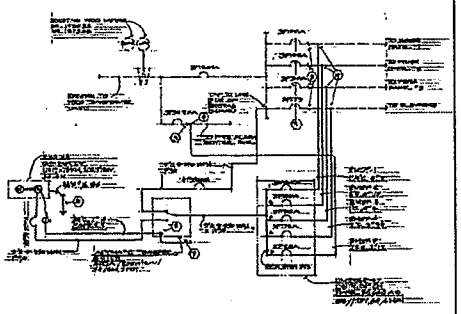

1 ONE-LINE DIAGRAM - PUROBANI

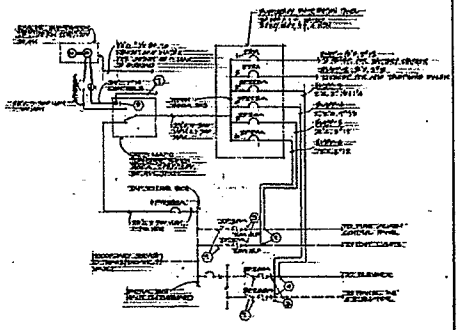

2 ONE-LINE DIAGRAM - MAKIA ALI

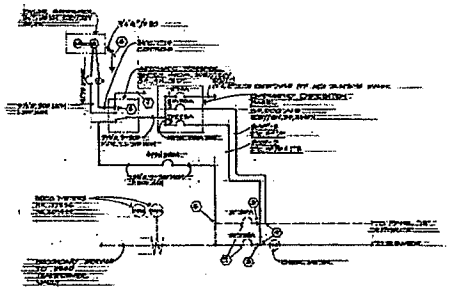

3 ONE-LINE DIAGRAM - KAUANIHULU

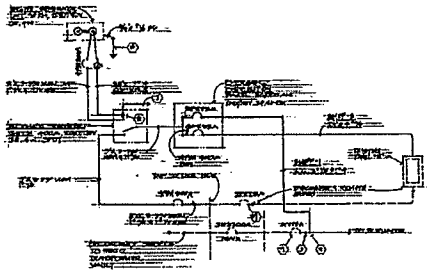

4 ONE-LINE DIAGRAM - PAOAKALANI

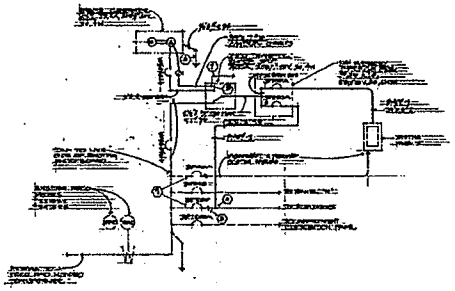

5 ONE-LINE DIAGRAM - PIMBANA

GENERAL ELECTRICAL NOTES

1. [illegible]
2. [illegible]
3. [illegible]
4. [illegible]
5. [illegible]
6. [illegible]
7. [illegible]
8. [illegible]
9. [illegible]

SCHEDULE OF CONTRACTORS

[illegible]	[illegible]	[illegible]	[illegible]	[illegible]	[illegible]
[illegible]	[illegible]	[illegible]	[illegible]	[illegible]	[illegible]

[illegible]	[illegible]	[illegible]	[illegible]	[illegible]
[illegible]	[illegible]	[illegible]	[illegible]	[illegible]

DEPARTMENT OF SOCIAL SERVICES AND HOUSING
HAWAII HOUSING AUTHORITY
STATE OF HAWAII

CONT. No. 506

[illegible]

ONE LINE DIAGRAMS

[illegible]

[illegible]

[illegible]

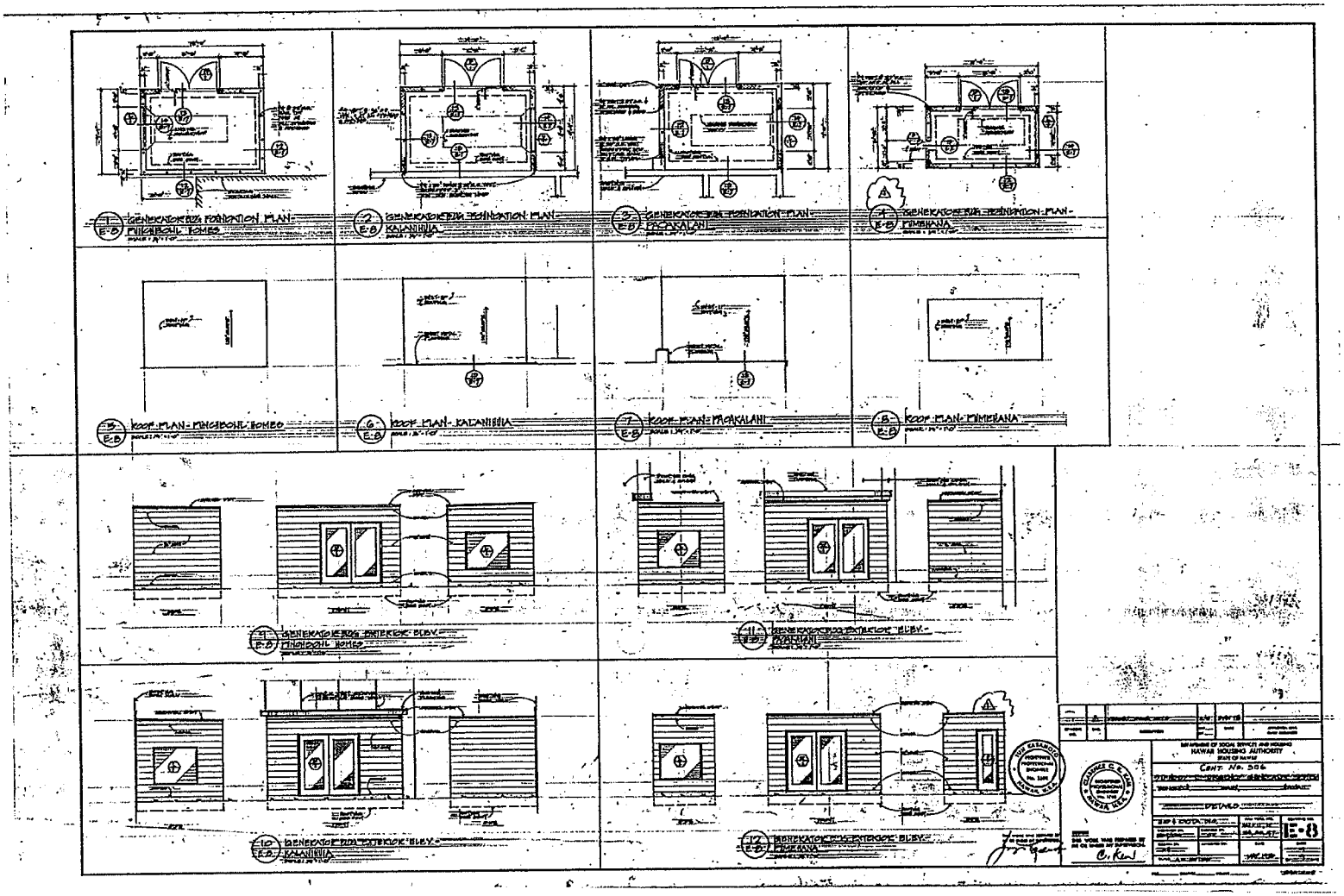
1 E-8 GENERATOR BLDG FOUNDATION PLAN - PINGHBOWL HOMES
2 E-8 GENERATOR BLDG FOUNDATION PLAN - KALANIHUA
3 E-8 GENERATOR BLDG FOUNDATION PLAN - PACAKALANI
4 E-8 GENERATOR BLDG FOUNDATION PLAN - PIMEHANA
5 E-8 ROOF PLAN - PINGHBOWL HOMES
6 E-8 ROOF PLAN - KALANIHUA
7 E-8 ROOF PLAN - PACAKALANI
8 E-8 ROOF PLAN - PIMEHANA
9 E-8 GENERATOR BLDG EXTERIOR ELEV. - PINGHBOWL HOMES
11 E-8 GENERATOR BLDG EXTERIOR ELEV. - PACAKALANI
10 E-8 GENERATOR BLDG EXTERIOR ELEV. - KALANIHUA
12 E-8 GENERATOR BLDG EXTERIOR ELEV. - PIMEHANA
HAWAII HOUSING AUTHORITY
CONT. No. 306
DETAILS
E-8

KATO
A. C. GENERATOR
PART NUMBER
SERIAL NUMBER
IMPORTANT: WHEN ORDERING PARTS ALWAYS INCLUDE PART NUMBER AND SERIAL NUMBER
ALTERNATOR
TYPE OR DESIGN NO.
TEMP. RISE
CONTINUOUS
STANDBY
K.W.
K.V.A.
VOLTS
AMPS
DESIGN AMBIENT
INSULATION CLASS
PHASE
HZ (CPS)
R.P.M.
PF.
WIRE
ALT. FIELD AMPS
ALT. FIELD VOLTS
ALTERNATOR
EXCITER
FIELD NO.
ARM. NO.
EXC. FIELD VOLTS
EXC. FIELD AMPS
WATTS
COMPANY
MANKATO
MINNESOTA
U.S.A.

APPENDIX A2: AMP 35

A2.2: Pumehana

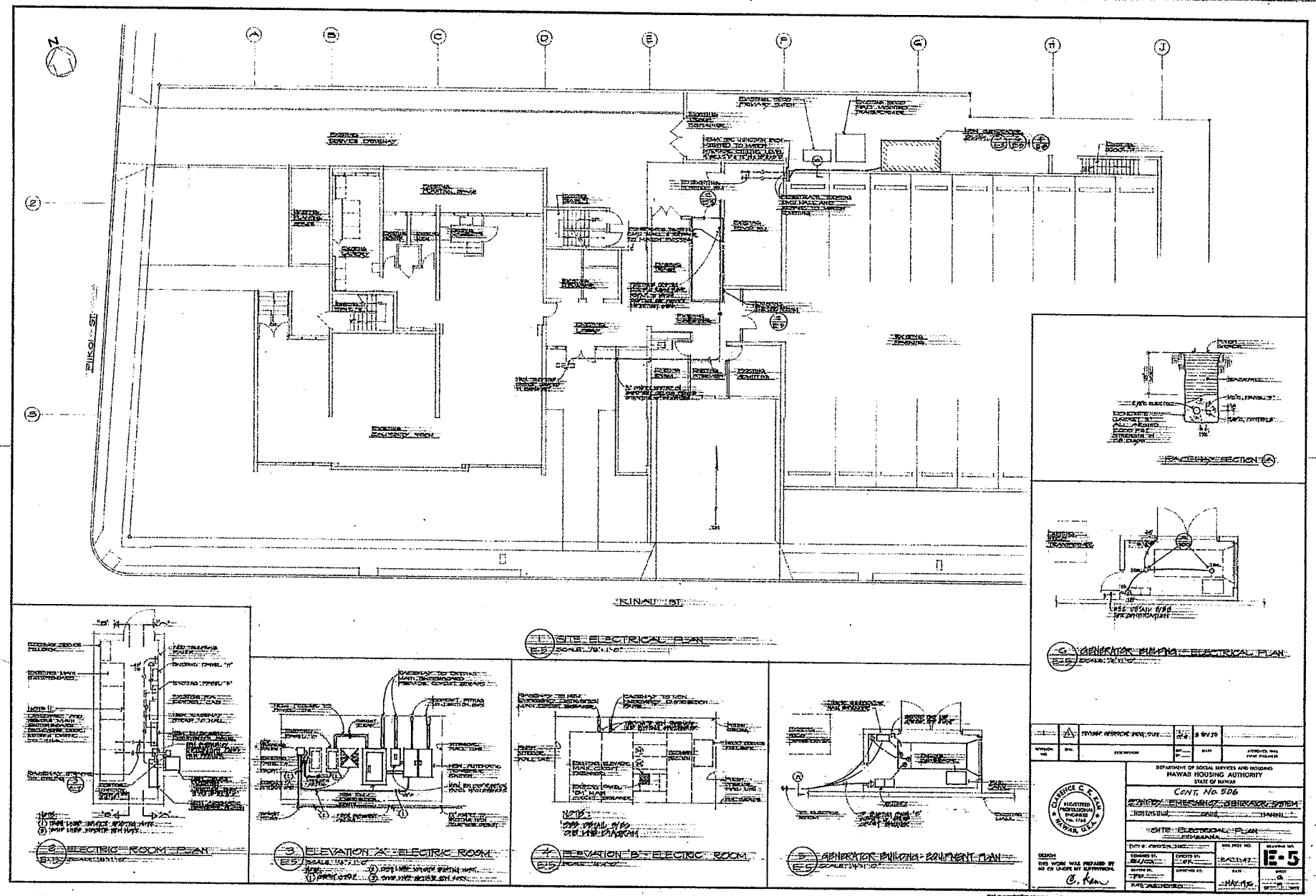

PIIKOI ST.
KINAU ST.
1 SITE ELECTRICAL PLAN
E-5
2 ELECTRIC ROOM PLAN
E-5
3 ELEVATION 'A' - ELECTRIC ROOM
E-5
4 ELEVATION 'B' - ELECTRIC ROOM
E-5
5 GENERATOR BUILDING - EQUIPMENT PLAN
E-5
6 GENERATOR BUILDING - ELECTRICAL PLAN
E-5
DEPARTMENT OF SOCIAL SERVICES AND HOUSING
HAWAII HOUSING AUTHORITY
STATE OF HAWAII
CONT. No. 506
SITE ELECTRICAL PLAN
E-5
CLARENCE C. K. KAN
REGISTERED PROFESSIONAL ENGINEER
HAWAII, U.S.A.
DESIGN
THIS WORK WAS PREPARED BY ME OR UNDER MY SUPERVISION.

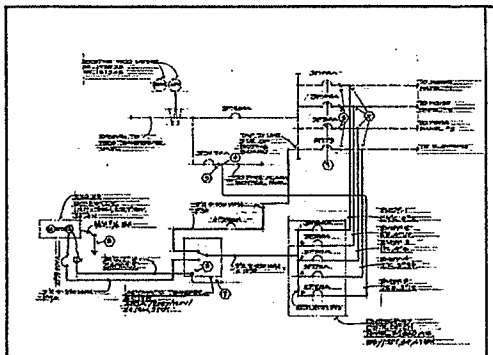

1 ONE LINE DIAGRAM PINGHOHL

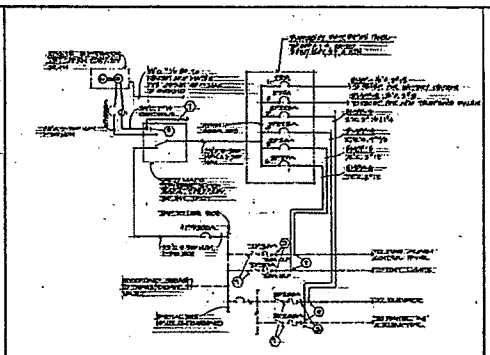

2 ONE LINE DIAGRAM MAKIA ALI

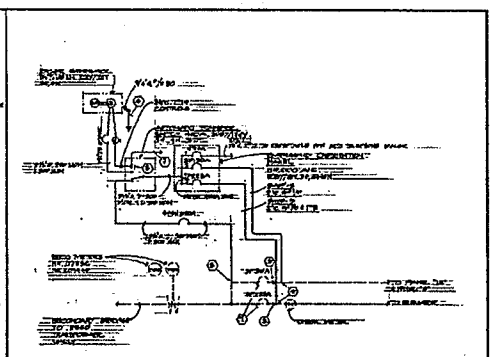

3 ONE LINE DIAGRAM KALANIHUA

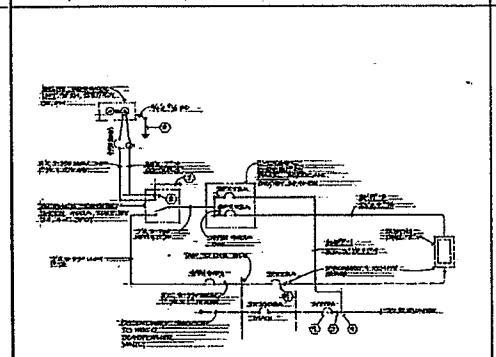

4 ONE LINE DIAGRAM PAOAKALANI

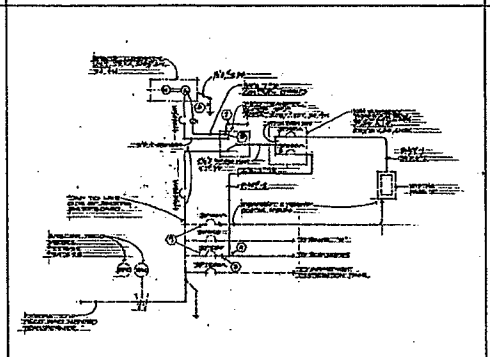

5 ONE LINE DIAGRAM PIMEHANA

GENERAL ELECTRICAL NOTES

1. BASE LINES INDICATES EXISTING WORK
2. BOLD LINES INDICATES NEW WORK
3. DISCONNECT & REMOVE EXISTING FIXTURE CIRCUIT
4. DISCONNECT EXISTING FIXTURE CIRCUIT
5. [illegible]
6. [illegible]
7. [illegible]
8. [illegible]
9. [illegible]

SCHEDULE OF LIGHT FIXTURES

FIXTURE TYPE	[illegible]	[illegible]	[illegible]	[illegible]	[illegible]
A		[illegible]	[illegible]	[illegible]	[illegible]

DEPARTMENT OF SOCIAL SERVICES AND HOUSING
HAWAII HOUSING AUTHORITY
STATE OF HAWAII

CONT. NO. 506

ONE LINE DIAGRAMS

THIS WORK WAS PREPARED BY ME OR UNDER MY SUPERVISION.

E-6

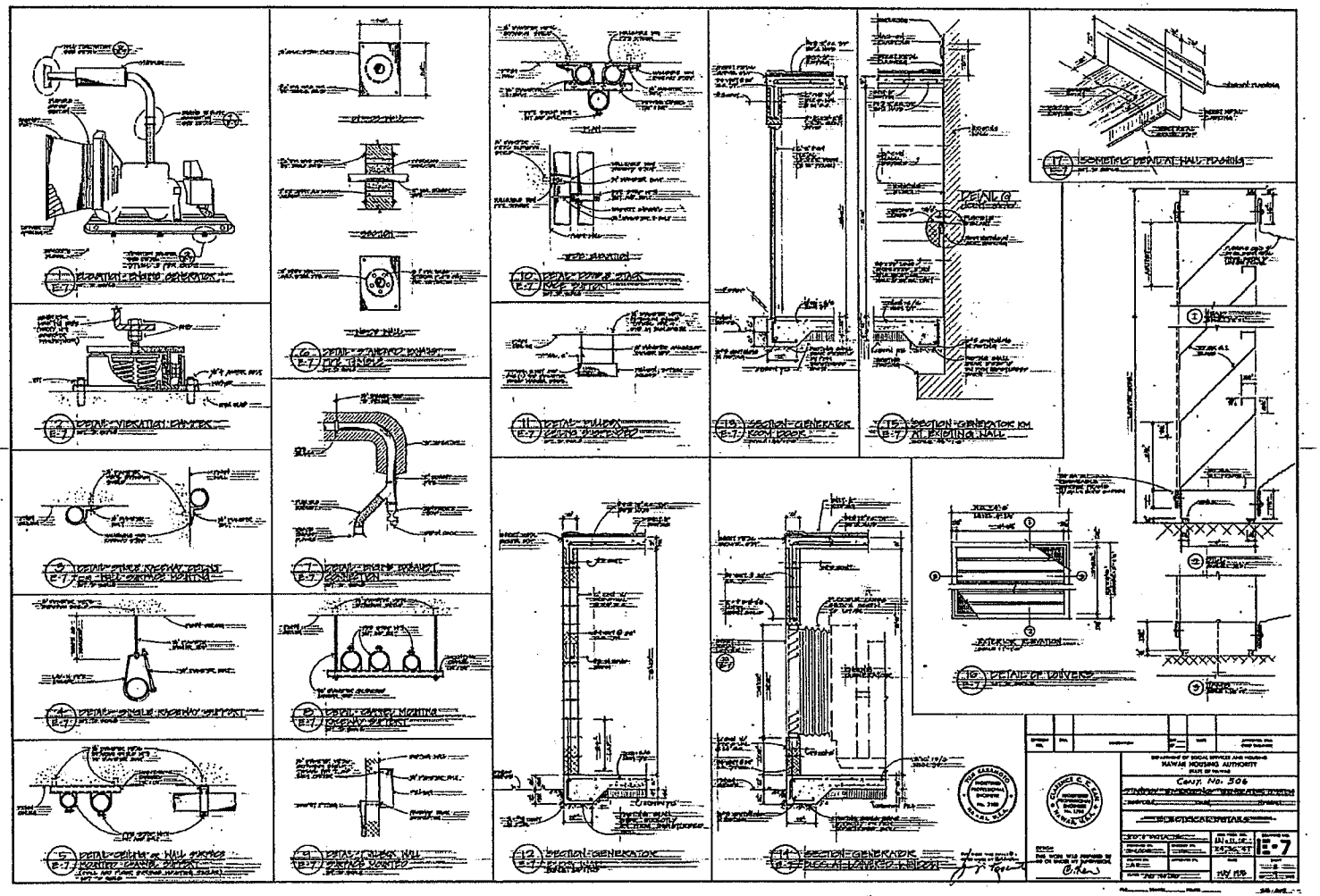

1 ELEVATION - ENGINE GENERATOR
E-7
2 DETAIL - VIBRATION DAMPER
E-7
3 DETAIL - SINGLE RACEWAY CEILING OR WALL SURFACE MOUNTING
E-7
4 DETAIL - SINGLE RACEWAY SUPPORT
E-7
5 DETAIL - CEILING OR WALL SURFACE MOUNTED CONDUIT SUPPORT
E-7
6 DETAIL - STANDARD EXHAUST PIPE TUNNEL
E-7
7 DETAIL - ENGINE EXHAUST CONNECTION
E-7
8 DETAIL - CONDUIT MOUNTING RACEWAY SUPPORT
E-7
9 DETAIL - JUNCTION WALL SURFACE MOUNTED
E-7
10 DETAIL - DOOR & STACK PIPE SUPPORT
E-7
11 DETAIL - PULLBOX CEILING SUSPENDED
E-7
12 SECTION - GENERATOR
E-7
13 SECTION - GENERATOR ROOM DOOR
E-7
14 SECTION - GENERATOR
E-7
15 SECTION - GENERATOR KM AT EXISTING WALL
E-7
16 DETAIL OF LOUVERS
E-7
17 SOMETIME DETAIL AT WALL FLASHING
E-7
DEPARTMENT OF SOCIAL SERVICES AND HOUSING
HAWAII HOUSING AUTHORITY
STATE OF HAWAII
CONT. No. 506
ELECTRICAL DETAILS
E-7

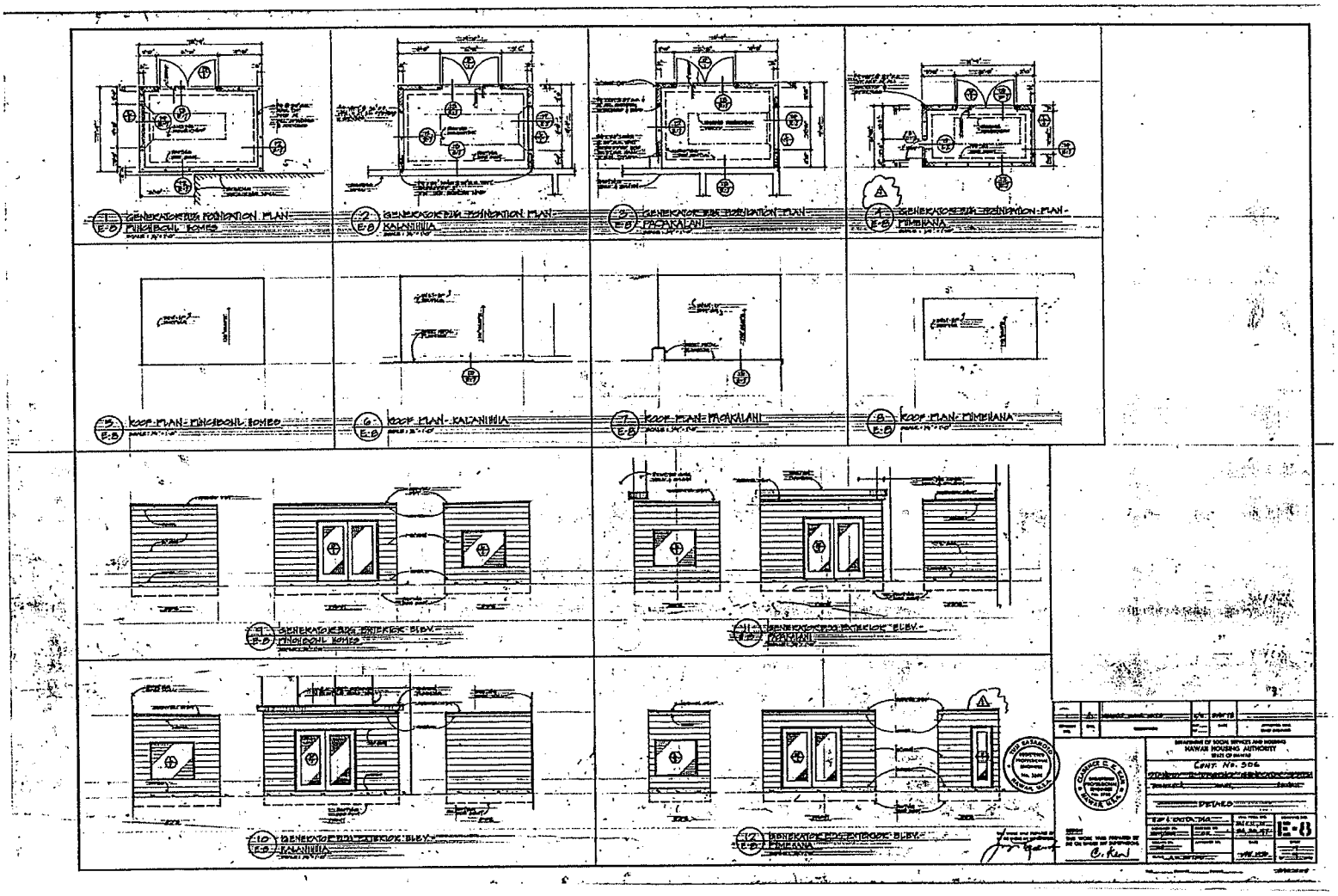
1 E-8 GENERATOR BLDG FOUNDATION PLAN - PINCHBOWL HOMES
2 E-8 GENERATOR BLDG FOUNDATION PLAN - KALANIHIIA
3 E-8 GENERATOR BLDG FOUNDATION PLAN - PACAKALANI
4 E-8 GENERATOR BLDG FOUNDATION PLAN - MIMEHANA
5 E-8 ROOF PLAN - PINCHBOWL HOMES
6 E-8 ROOF PLAN - KALANIHIIA
7 E-8 ROOF PLAN - PACAKALANI
8 E-8 ROOF PLAN - MIMEHANA
9 E-8 GENERATOR BLDG EXTERIOR ELEV. - PINCHBOWL HOMES
11 E-8 GENERATOR BLDG EXTERIOR ELEV. - PACAKALANI
10 E-8 GENERATOR BLDG EXTERIOR ELEV. - KALANIHIIA
12 E-8 GENERATOR BLDG EXTERIOR ELEV. - MIMEHANA
DEPARTMENT OF SOCIAL SERVICES AND HOUSING
HAWAII HOUSING AUTHORITY
STATE OF HAWAII
CONT. No. 506
DETAILS
E-8

APPENDIX A2: AMP 35

A2.3: Punchbowl Homes

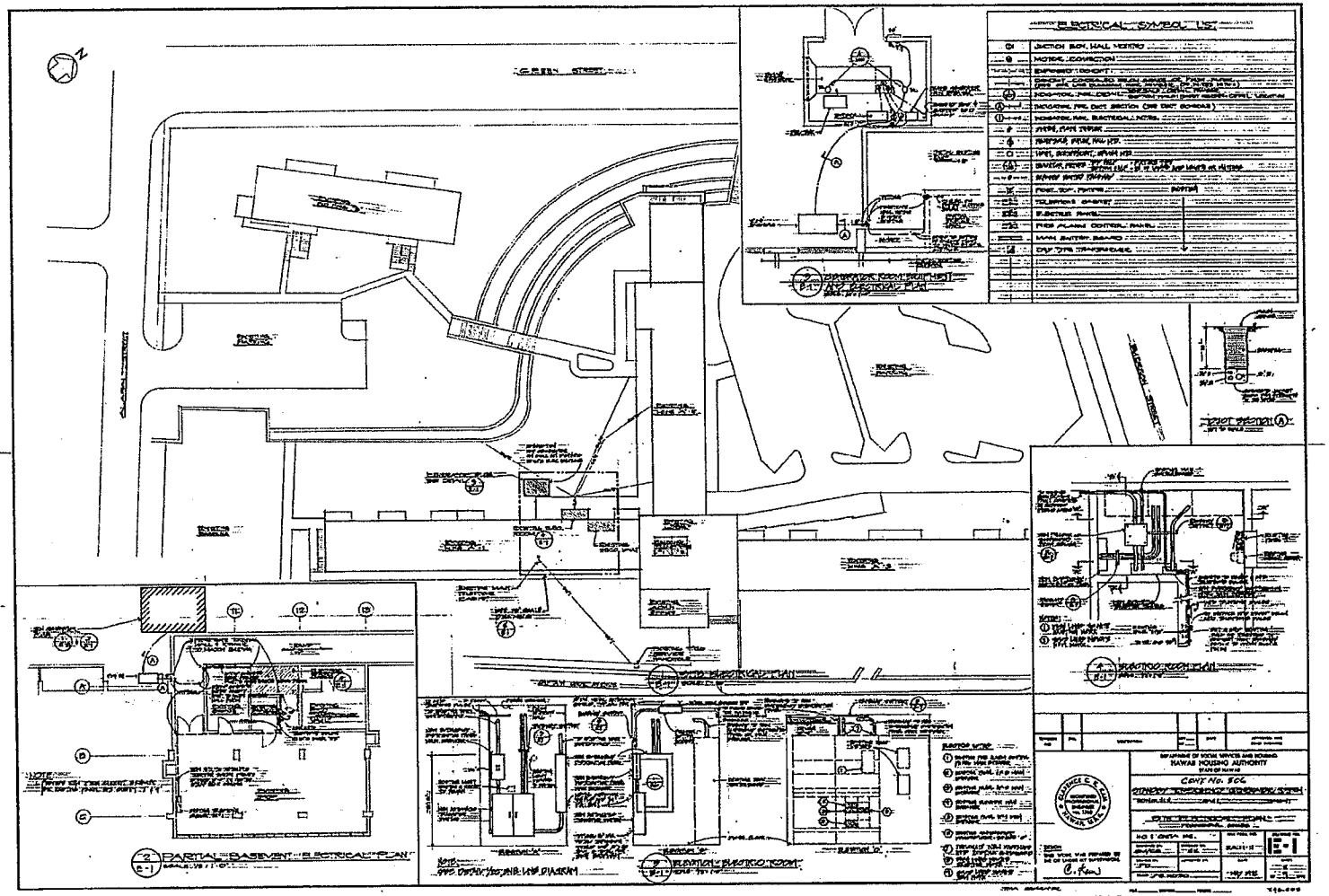
ELECTRICAL SYMBOL LIST
JUNCTION BOX, WALL MOUNTING
MOTOR CONNECTION
EXPOSED CONDUIT
INDICATOR FOR DUCT SECTION (SEE DUCT SCHEDULE)
INDICATOR FOR ELECTRICAL NOTES
FIRE ALARM CONTROL PANEL
MAIN BATTERY BOARD
DRY TYPE TRANSFORMER
GREEN STREET
PARTIAL BASEMENT ELECTRICAL PLAN
ELEVATION ELECTRIC ROOM
ELECTRICAL ROOM PLAN
HAWAII HOUSING AUTHORITY
STATE OF HAWAII
CONT NO. 506
E-1

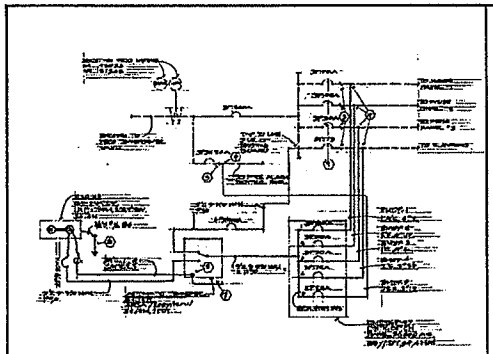

1 ONE LINE DIAGRAM - PIRCHEGHL

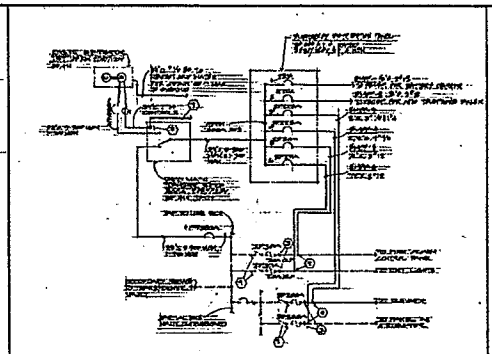

2 ONE LINE DIAGRAM - MAKUA ALI

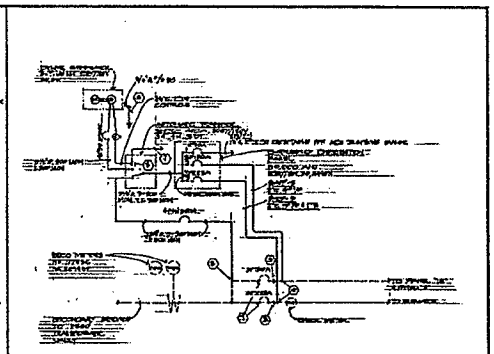

3 ONE LINE DIAGRAM - KALANIHULA

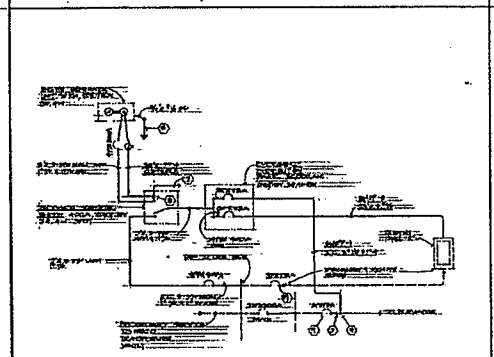

4 ONE LINE DIAGRAM - PAOAKALANI

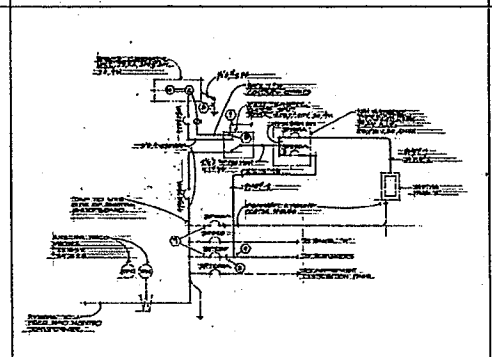

5 ONE LINE DIAGRAM - PIMENANA

SCHEDULE OF LIGHT FIXTURES

DEPARTMENT OF SOCIAL SERVICES AND HOUSING
HAWAII HOUSING AUTHORITY
STATE OF HAWAII

CONT. NO. 506

ONE LINE DIAGRAMS

E-6

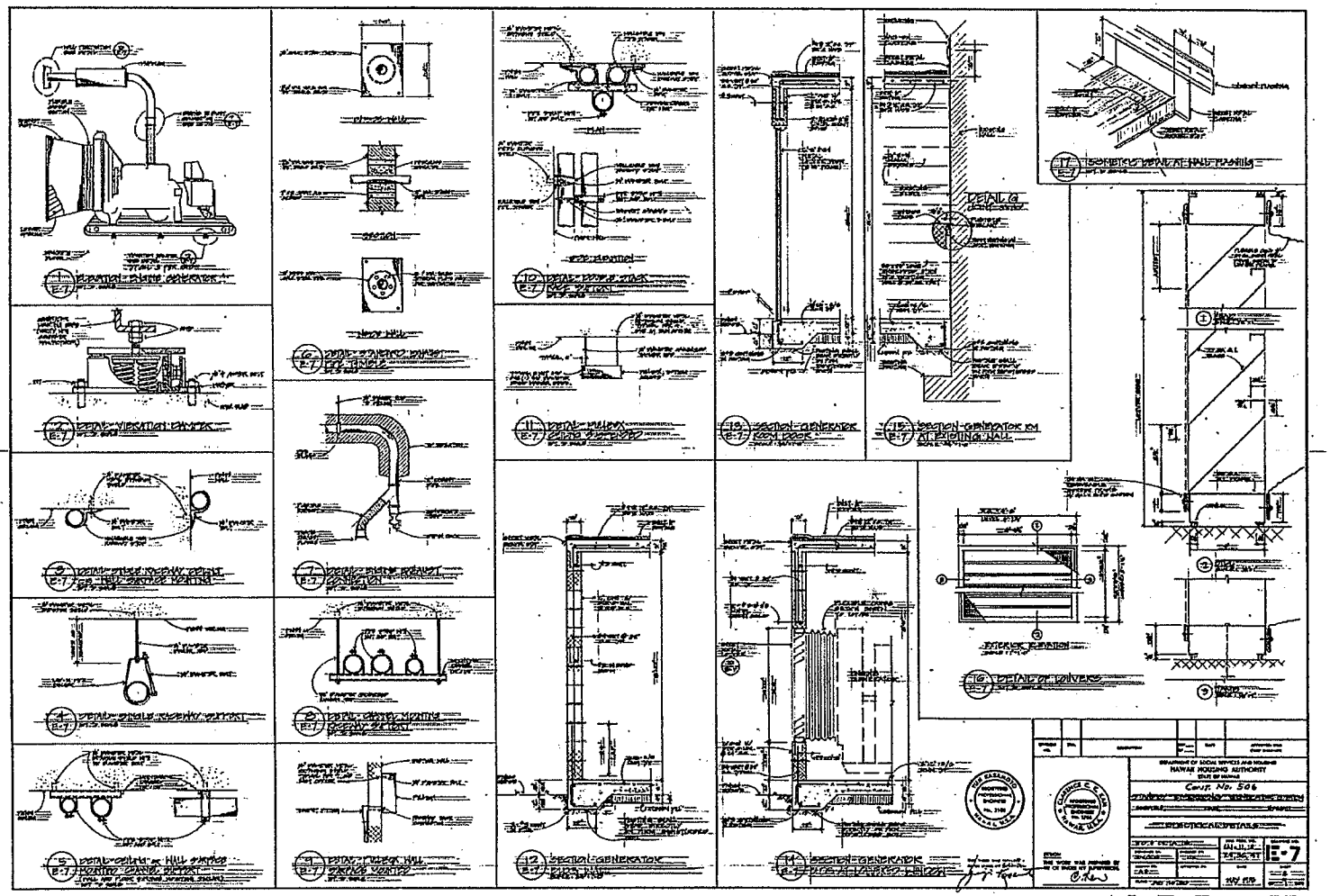
DETAIL G
Const. No. 506
E-7

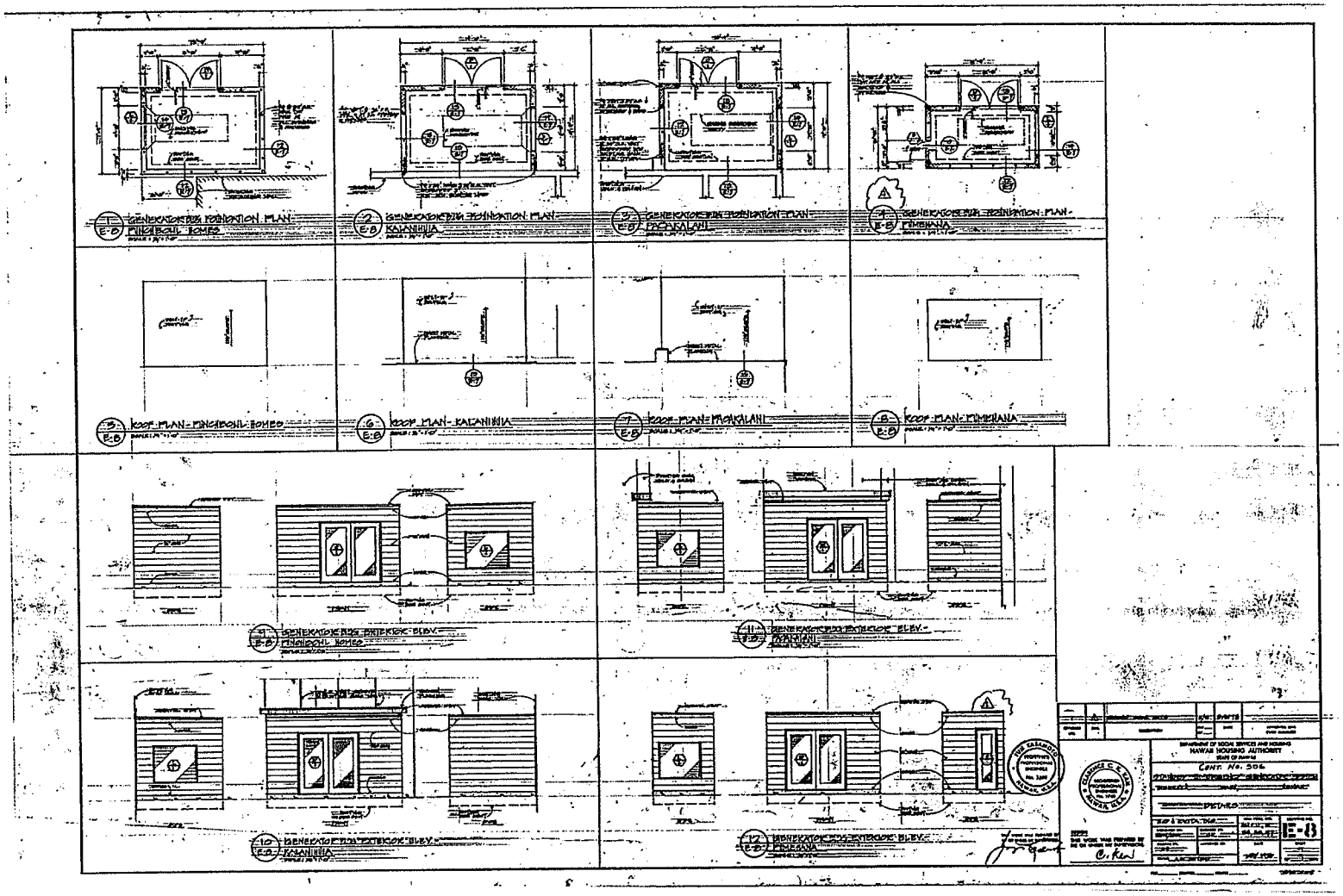
1 E-8 GENERATOR BLDG FOUNDATION PLAN - PINGHOOHL HOMES
2 E-8 GENERATOR BLDG FOUNDATION PLAN - KALANIHIIA
3 E-8 GENERATOR BLDG FOUNDATION PLAN - PAOAKALANI
4 E-8 GENERATOR BLDG FOUNDATION PLAN - PIMEHANA
5 E-8 ROOF PLAN - PINGHOOHL HOMES
6 E-8 ROOF PLAN - KALANIHIIA
7 E-8 ROOF PLAN - PAOAKALANI
8 E-8 ROOF PLAN - PIMEHANA
9 E-8 GENERATOR BLDG EXTERIOR ELEV. - PINGHOOHL HOMES
11 E-8 GENERATOR BLDG EXTERIOR ELEV. - PAOAKALANI
10 E-8 GENERATOR BLDG EXTERIOR ELEV. - KALANIHIIA
12 E-8 GENERATOR BLDG EXTERIOR ELEV. - PIMEHANA
DEPARTMENT OF SOCIAL SERVICES AND HOUSING
HAWAII HOUSING AUTHORITY
STATE OF HAWAII
CONT. No. 306
DETAILS
E-8

KATO
PART NUMBER
SERIAL NUMBER
ALTERNATOR
TEMP RISE
CONTINUOUS
STANDBY
DESIGN AMBIENT
AMPS
INSULATION CLASS
WIRE
ALTERNATOR
EXC FIELD VOLTS
WATTS

APPENDIX A3: AMP 42

APPENDIX A3: AMP 42

A3.1: Hale Poai

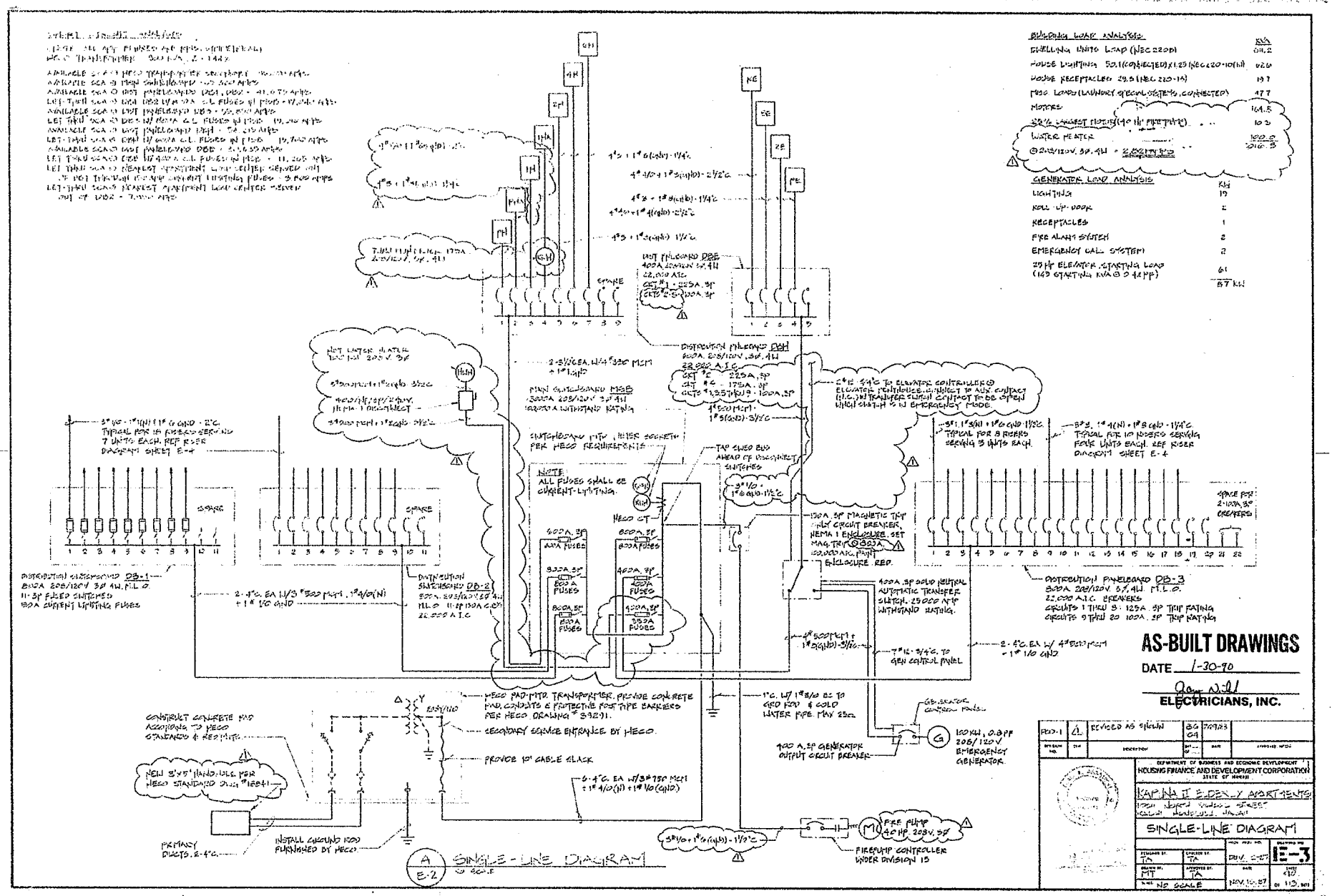

BUILDING LOAD ANALYSIS
KVA
DWELLING UNITS LOAD (NEC 220B) 611.2
HOUSE LIGHTING 50.1 (CONNECTED) X 1.25 (NEC 220-10(N)) 62.6
HOUSE RECEPTACLES 29.5 (NEC 220-13) 19.7
MISC. LOADS (LAUNDRY SPECIAL SYSTEMS, CONNECTED) 47.7
MOTORS 164.5
25% LARGEST MOTOR (40 HP FIRE PUMP) 10.3
WATER HEATER 100.0
@ 208/120V, 3Ø, 4W = 2.882 MVA
GENERATOR LOAD ANALYSIS
KW
LIGHTING 19
ROLL-UP DOOR 2
RECEPTACLES 1
FIRE ALARM SYSTEM 2
EMERGENCY CALL SYSTEM 2
25 HP ELEVATOR STARTING LOAD (145 STARTING KVA @ 0.42 PF) 61
57 KW
DISTRIBUTION PANELBOARD DB-1
DISTRIBUTION PANELBOARD DB-2
DISTRIBUTION PANELBOARD DB-3
DISTRIBUTION PANELBOARD DBE
DISTRIBUTION PANELBOARD DBH
MAIN GOVERNORS MGB
SWITCHBOARD MTR. METER SOCKETS PER HECO REQUIREMENTS
NOTE: ALL FUSES SHALL BE CURRENT-LIMITING.
HECO CT
TAP SWED BUS AHEAD OF DISCONNECT SWITCHES
150 A, 3P MAGNETIC TRIP ONLY CIRCUIT BREAKER, NEMA 1 ENCLOSURE, SET MAG. TRIP @ 800 A, 100,000 AIC, PAINT ENCLOSURE RED.
400 A, 3P SOLID NEUTRAL AUTOMATIC TRANSFER SWITCH, 25,000 AMP WITHSTAND RATING.
HECO PAD-MTD. TRANSFORMER. PROVIDE CONCRETE PAD, CONDUITS & PROTECTIVE POST TYPE BARRIERS PER HECO DRAWING # 39291.
SECONDARY SERVICE ENTRANCE BY HECO.
PROVIDE 10' CABLE SLACK
CONSTRUCT CONCRETE PAD ACCORDING TO HECO STANDARDS & REQ'MTS.
NEW 3'x5' HANDHOLE PER HECO STANDARD DWG # 18841
PRIMARY DUCTS, 2-4"C.
INSTALL GROUND ROD FURNISHED BY HECO.
400 A, 3P GENERATOR OUTPUT CIRCUIT BREAKER
100 KW, 0.8 PF 208/120 V EMERGENCY GENERATOR
FIRE PUMP 40 HP, 208V, 3Ø
FIREPUMP CONTROLLER UNDER DIVISION 15
A E-2 SINGLE-LINE DIAGRAM
NO SCALE
AS-BUILT DRAWINGS
DATE 1-30-90
ELECTRICIANS, INC.
REVISED AS SHOWN
DEPARTMENT OF BUSINESS AND ECONOMIC DEVELOPMENT
HOUSING FINANCE AND DEVELOPMENT CORPORATION
STATE OF HAWAII
KAPUNA II ELDERLY APARTMENTS
SINGLE-LINE DIAGRAM
E-3
NO SCALE

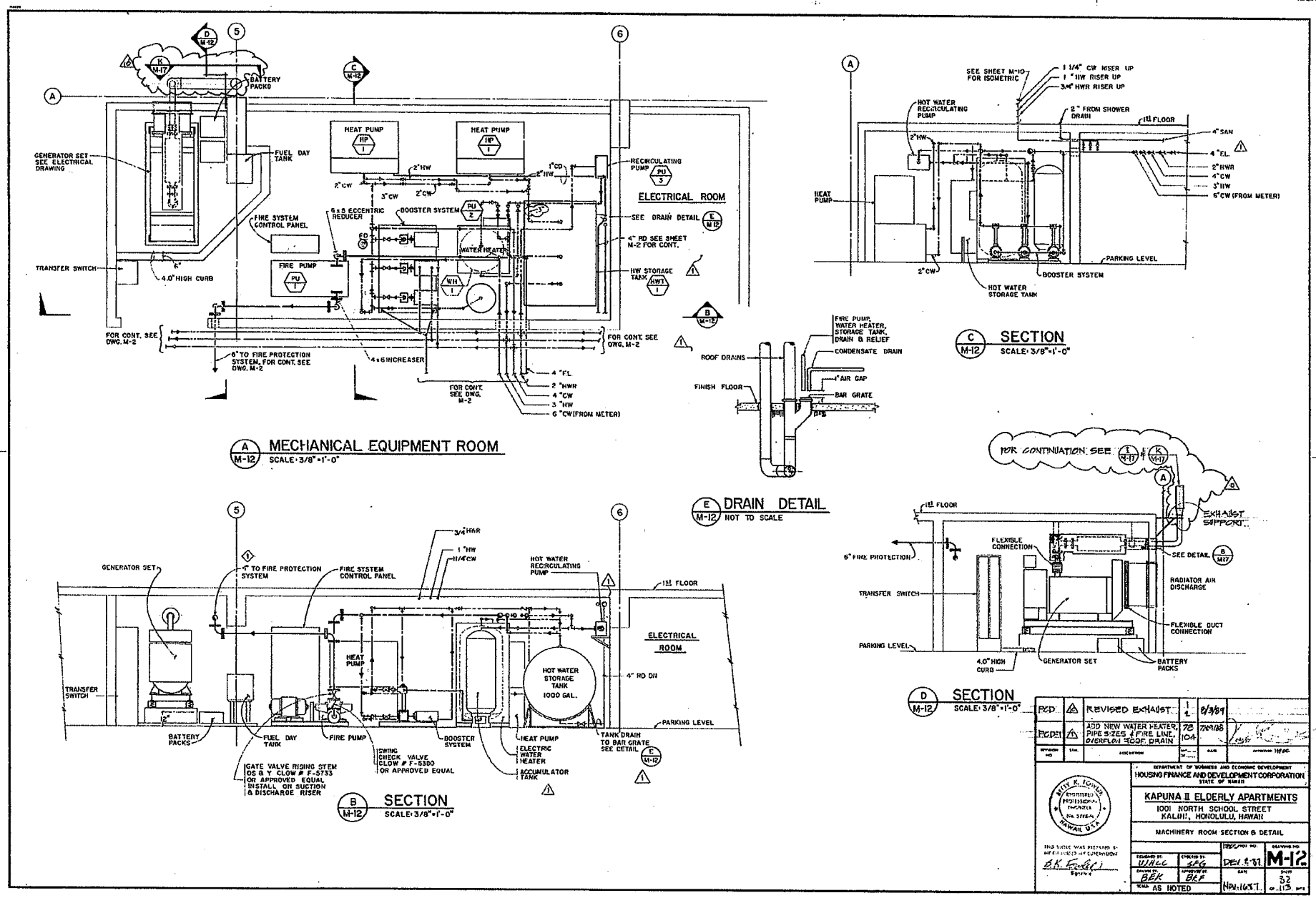

A M-12 MECHANICAL EQUIPMENT ROOM
SCALE: 3/8"=1'-0"
GENERATOR SET SEE ELECTRICAL DRAWING
BATTERY PACKS
FUEL DAY TANK
FIRE SYSTEM CONTROL PANEL
TRANSFER SWITCH
4.0" HIGH CURB
HEAT PUMP
HEAT PUMP
FIRE PUMP
6x5 ECCENTRIC REDUCER
BOOSTER SYSTEM
WATER HEATER
RECIRCULATING PUMP
ELECTRICAL ROOM
SEE DRAIN DETAIL
4" RD SEE SHEET M-2 FOR CONT.
HW STORAGE TANK
FOR CONT. SEE DWG. M-2
6" TO FIRE PROTECTION SYSTEM, FOR CONT. SEE DWG. M-2
4x6 INCREASER
FOR CONT. SEE DWG. M-2
4 "FL
2 "HWR
4 "CW
3 "HW
6 "CW (FROM METER)
B M-12 SECTION
SCALE: 3/8"=1'-0"
GENERATOR SET
4" TO FIRE PROTECTION SYSTEM
FIRE SYSTEM CONTROL PANEL
3/4" HWR
1 "HW
1 1/4" CW
HOT WATER RECIRCULATING PUMP
1st FLOOR
ELECTRICAL ROOM
HEAT PUMP
HOT WATER STORAGE TANK 1000 GAL.
4" RD DN
PARKING LEVEL
TRANSFER SWITCH
BATTERY PACKS
FUEL DAY TANK
FIRE PUMP
BOOSTER SYSTEM
HEAT PUMP
ELECTRIC WATER HEATER
ACCUMULATOR TANK
TANK DRAIN TO BAR GRATE SEE DETAIL
GATE VALVE RISING STEM OS & Y CLOW # F-5733 OR APPROVED EQUAL INSTALL ON SUCTION & DISCHARGE RISER
SWING CHECK VALVE CLOW # F-5300 OR APPROVED EQUAL
E M-12 DRAIN DETAIL
NOT TO SCALE
ROOF DRAINS
FINISH FLOOR
FIRE PUMP, WATER HEATER, STORAGE TANK, DRAIN & RELIEF
CONDENSATE DRAIN
1" AIR GAP
BAR GRATE
C M-12 SECTION
SCALE: 3/8"=1'-0"
SEE SHEET M-10 FOR ISOMETRIC
1 1/4" CW RISER UP
1 "HW RISER UP
3/4" HWR RISER UP
HOT WATER RECIRCULATING PUMP
2" FROM SHOWER DRAIN
1st FLOOR
4" SAN
4 "FL
2" HWR
4" CW
3" HW
6" CW (FROM METER)
HEAT PUMP
PARKING LEVEL
BOOSTER SYSTEM
HOT WATER STORAGE TANK
D M-12 SECTION
SCALE: 3/8"=1'-0"
FOR CONTINUATION SEE
EXHAUST SUPPORT
1st FLOOR
6" FIRE PROTECTION
FLEXIBLE CONNECTION
SEE DETAIL
RADIATOR AIR DISCHARGE
TRANSFER SWITCH
FLEXIBLE DUCT CONNECTION
PARKING LEVEL
4.0" HIGH CURB
GENERATOR SET
BATTERY PACKS
REVISED EXHAUST
ADD NEW WATER HEATER, PIPE SIZES & FIRE LINE, OVERFLOW ROOF DRAIN
DEPARTMENT OF BUSINESS AND ECONOMIC DEVELOPMENT
HOUSING FINANCE AND DEVELOPMENT CORPORATION
STATE OF HAWAII
KAPUNA II ELDERLY APARTMENTS
1001 NORTH SCHOOL STREET
KALIHI, HONOLULU, HAWAII
MACHINERY ROOM SECTION & DETAIL
M-12
AS NOTED

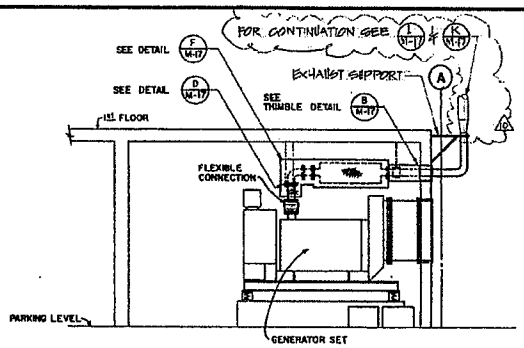

A M-17 MECHANICAL EQUIPMENT RM. SECTION

SCALE: 3/8"=1'-0"

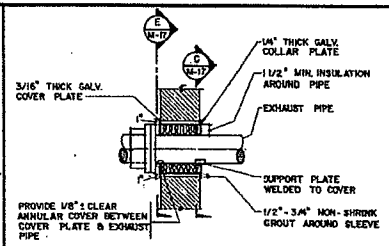

B M-17 THIMBLE DETAIL

NOT TO SCALE

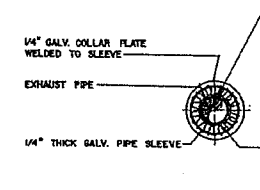

C M-17 SECTION

NOT TO SCALE

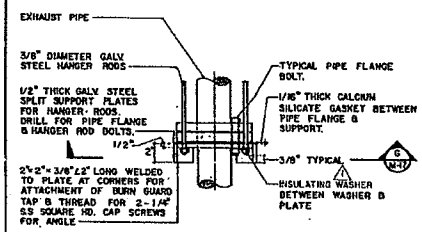

D M-17 DETAIL

NOT TO SCALE

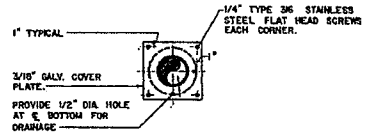

E M-17 SECTION

NOT TO SCALE

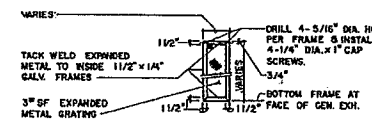

F M-17 BURN GUARD DETAIL

NOT TO SCALE

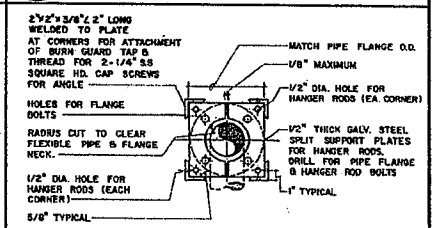

G M-17 SECTION

NOT TO SCALE

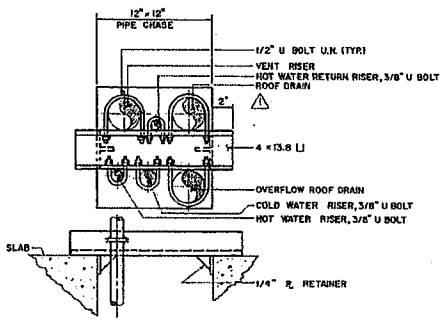

H M-17 PIPE CHASE-ROOMS B&BR SUPPORT DETAIL

NOT TO SCALE

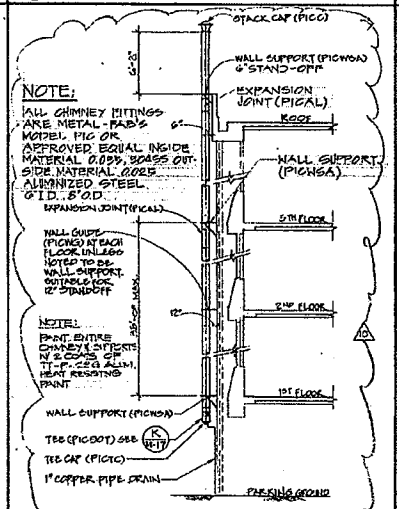

I M-17 GENERATOR EXHAUST

NOT TO SCALE:

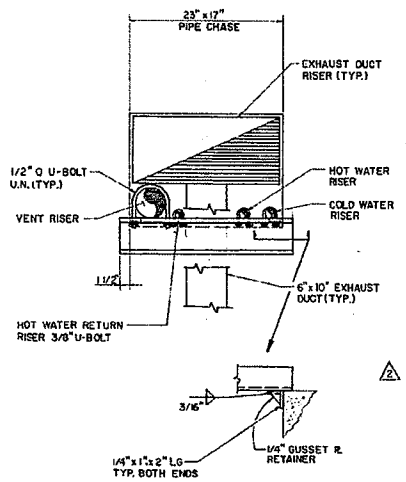

J M-17 PIPE CHASE-ROOMS A, AR, H & HR SUPPORT DETAIL

NOT TO SCALE

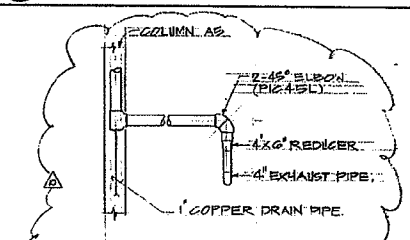

K M-17 SECTION

NOT TO SCALE:

PCD	2	REVISED EXHAUST.	27 2	8/3/01	
PCD-2	2	REVISED PIPE CHASE	27 35	7/29/00	
PCD	1	ADDED OVERFLOW ROOF DRAIN & REVISED WASHERS	53 104	7/29/00	
REVISION NO.	SYM.	DESCRIPTION	BY	DATE	APPROVED INDEX

DEPARTMENT OF BUSINESS AND ECONOMIC DEVELOPMENT
HOUSING FINANCE AND DEVELOPMENT CORPORATION
STATE OF HAWAII

KAPUNA II ELDERLY APARTMENTS
1001 NORTH SCHOOL STREET
KALIHI, HONOLULU, HAWAII

MECHANICAL EQUIPMENT ROOM
SECTION AND DETAILS

DESIGNED BY: WHLG	CHECKED BY: LFG	INF DE PROJ. NO. DEV 271	DRAWING NO. M-17
DRAWN BY: WJ	APPROVED BY: BKF	DATE Nov 16 '01	SHEET 57 OF 115
SCALE: AS NOTED			

BK Fowler
Signature

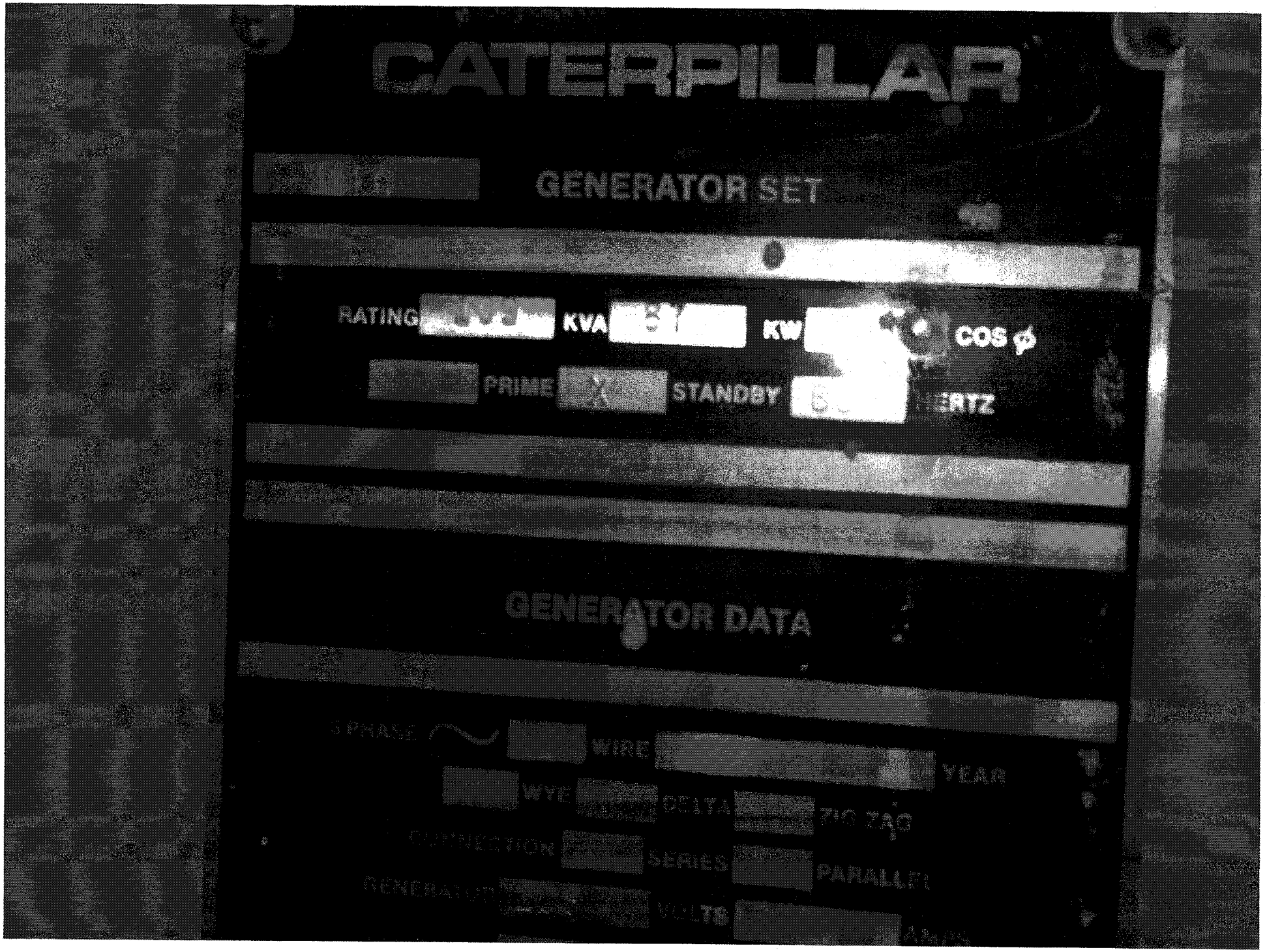
CATERPILLAR
GENERATOR SET
RATING
KVA
KW
COS φ
PRIME
STANDBY
HERTZ
GENERATOR DATA
3 PHASE
WIRE
YEAR
WYE
DELTA
ZIG ZAG
CONNECTION
SERIES
PARALLEL
GENERATOR
VOLTS

APPENDIX A3: AMP 42

A3.2: Ho'olulu

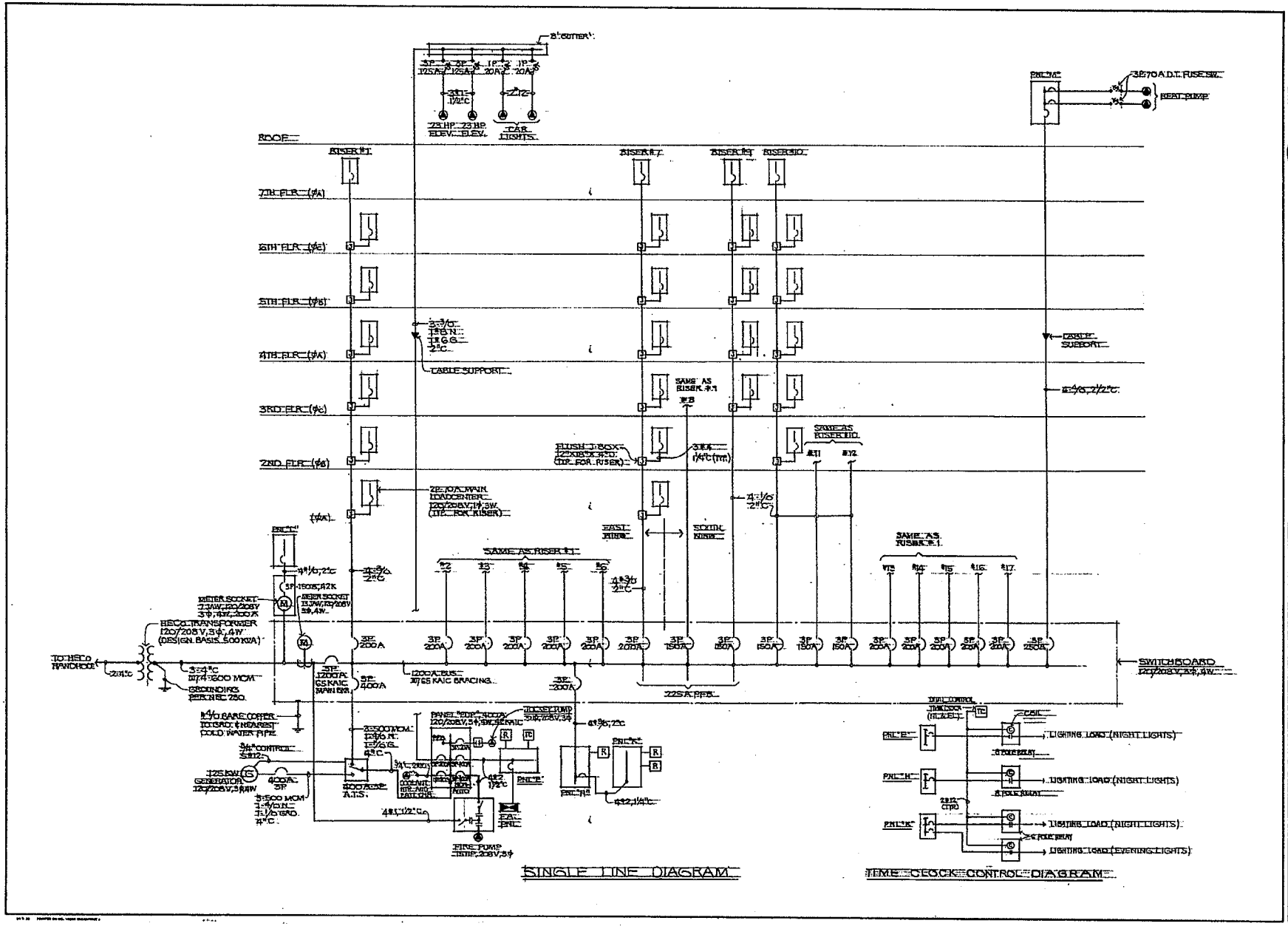

SINGLE LINE DIAGRAM

TIME CLOCK CONTROL DIAGRAM

REVISIONS | BY

PAUL LOUIE & ASSOCIATES, INC.
ARCHITECTURE URBAN DESIGN INTERIORS
650 Ala Moana Blvd., Suite 217 • Honolulu, Hawaii 96813 • (808) 524-6400

HO'OLULU ELDERLY HOUSING
HOUSING FINANCE AND DEVELOPMENT CORPORATION HFDC PROJ. NO. K41
SINGLE LINE DIAGRAM

Date NOV.1972
Scale NONE
Drawn GC/KMI
Job 9211
Sheet 173
E-12
Of 177 Sheets

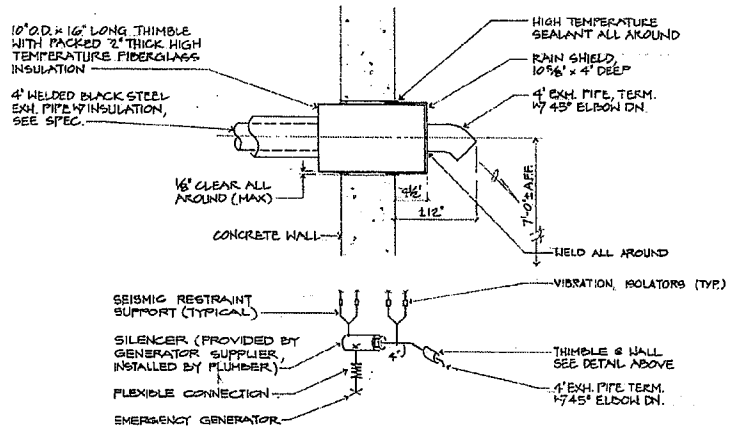

1 / M-21 EMERGENCY GENERATOR EXHAUST SYSTEM PIPING DIAGRAM
NOT TO SCALE

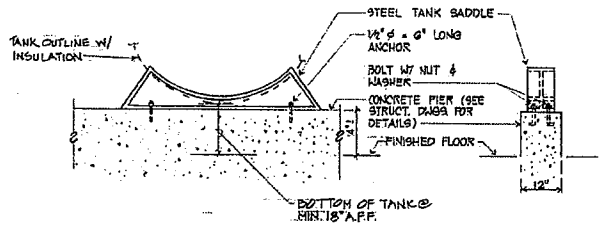

NOTE:
TANK SADDLE SHALL BE HOT DIPPED GALVANIZED AFTER FABRICATION.

2 / M-21 HST SUPPORT PIER DETAIL
NOT TO SCALE

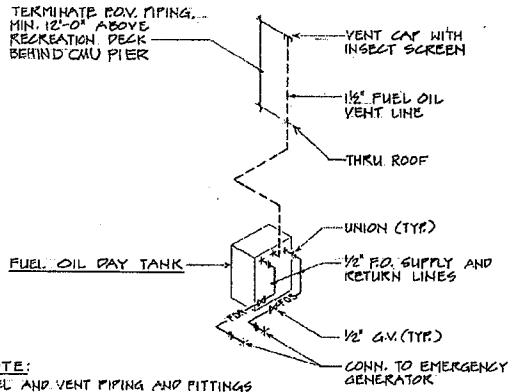

NOTE:
FUEL AND VENT PIPING AND FITTINGS SHALL BE SCHEDULE 40 BLACK STEEL

4 / M-21 DAY TANK PIPING DIAGRAM
NOT TO SCALE

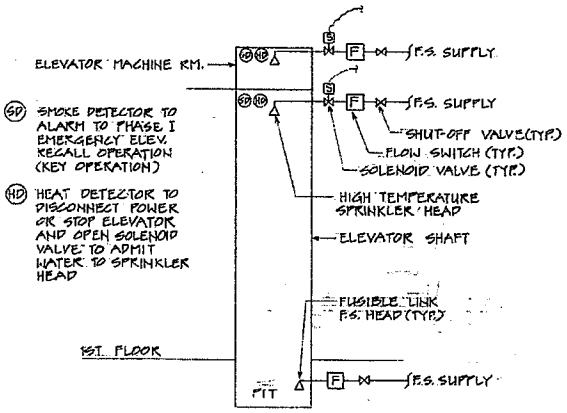

5 / M-21 ELEVATOR FIRE PROTECTION DIAGRAM
NOT TO SCALE

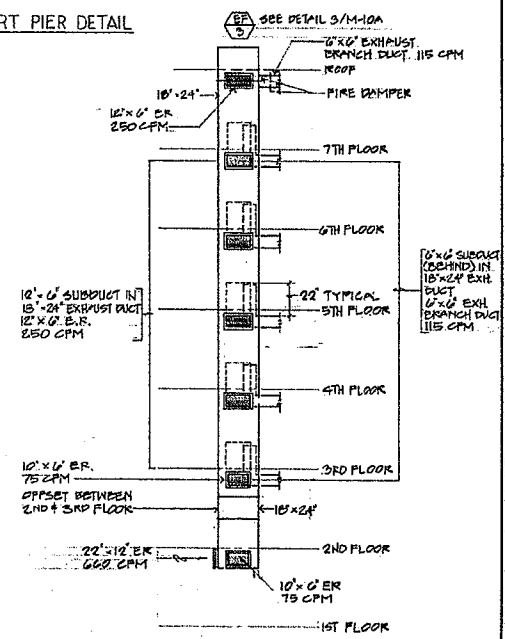

3 / M-21 TRASH ROOM EXHAUST DUCT RISER DIAGRAM
NOT TO SCALE

REVISIONS	BY

PAUL LOUIE & ASSOCIATES, INC.
ARCHITECTURE URBAN DESIGN INTERIORS
650 Ala Moana Blvd., Suite 217 · Honolulu, Hawaii 96813 · (808) 524-6400

HO'OLULU ELDERLY HOUSING
HOUSING FINANCE AND DEVELOPMENT CORPORATION HFDC PROJ. NO. K-41
EMERGENCY GENERATOR EXH. PIPING DIAGRAM, TRASH RM EXH. DUCT RISER DIAGRAM, DETAILS

NOV., 92
AS NOTED
W.L.
9211
159
M-21
177

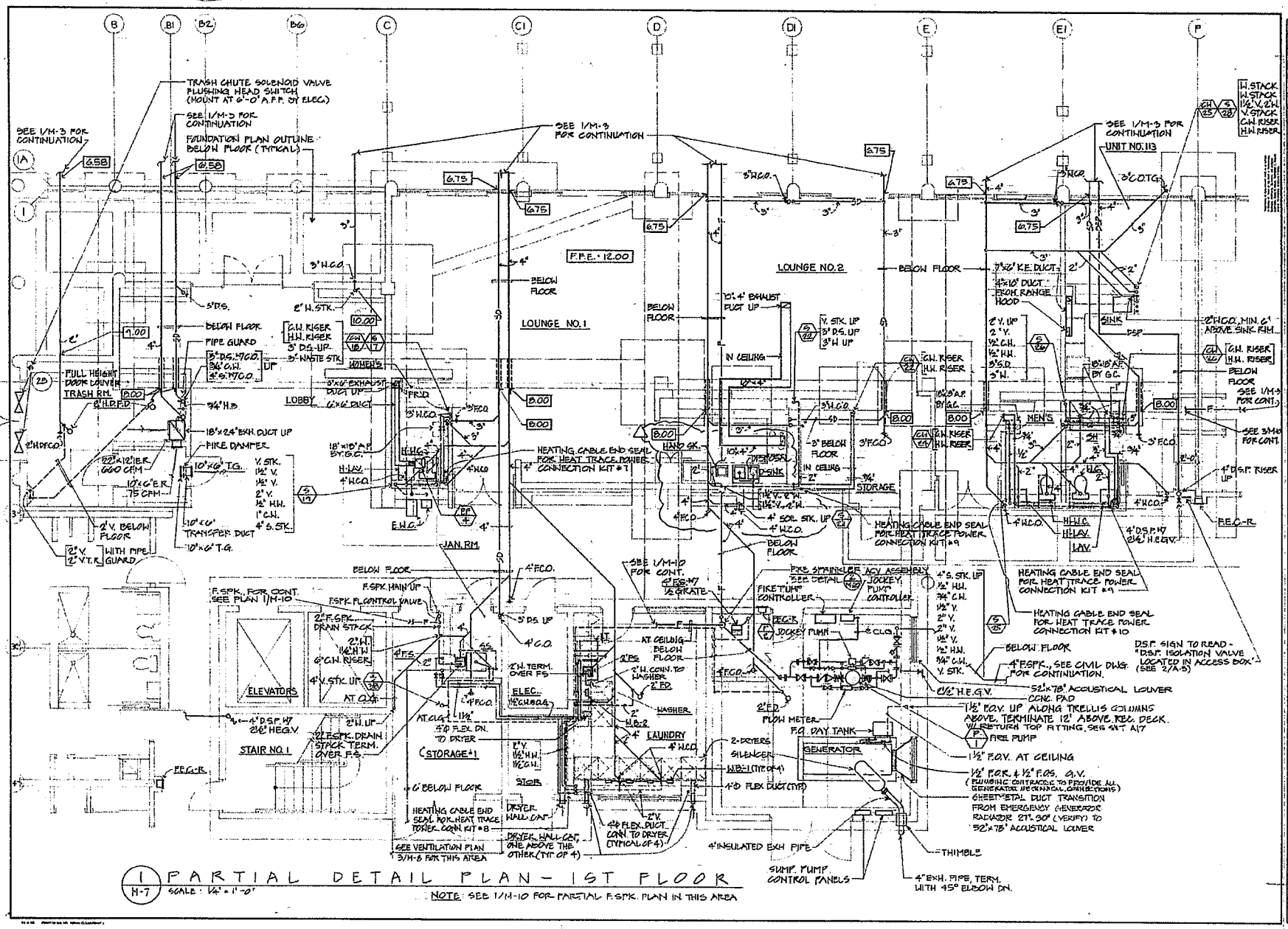

1 M-7 PARTIAL DETAIL PLAN - 1ST FLOOR

SCALE: 1/4" = 1'-0"

NOTE: SEE 1/M-10 FOR PARTIAL F.SPK. PLAN IN THIS AREA

REVISIONS	BY
△	

PAUL LOUIE & ASSOCIATES, INC.
ARCHITECTURE URBAN DESIGN INTERIORS
660 Ala Moana Blvd., Suite 217 · Honolulu, Hawaii 96813 · (808) 521-6600

HO'OLULU ELDERLY HOUSING
HOUSING FINANCE AND DEVELOPMENT CORPORATION HFDC PROJ. NO. K41
PARTIAL DETAIL PLAN - 1ST FLOOR

NOV. 12
AS NOTED
C.W.
9211
144
M-7
177

DATA
MODEL
K.V.A.
SERIAL
PHASE
VOLTS
HERTZ
AMPS
R.P.M.
POWER
CLASS B WINDING INSULATION AT 40° C
WAUKESHA, WIS.
MADE IN U.S.A.
GENERAC CORP.
DATE
GROUP
DESCRIPTION
ASSEMBLY NUMBERS

APPENDIX A3: AMP 42

A3.3: Kamalu

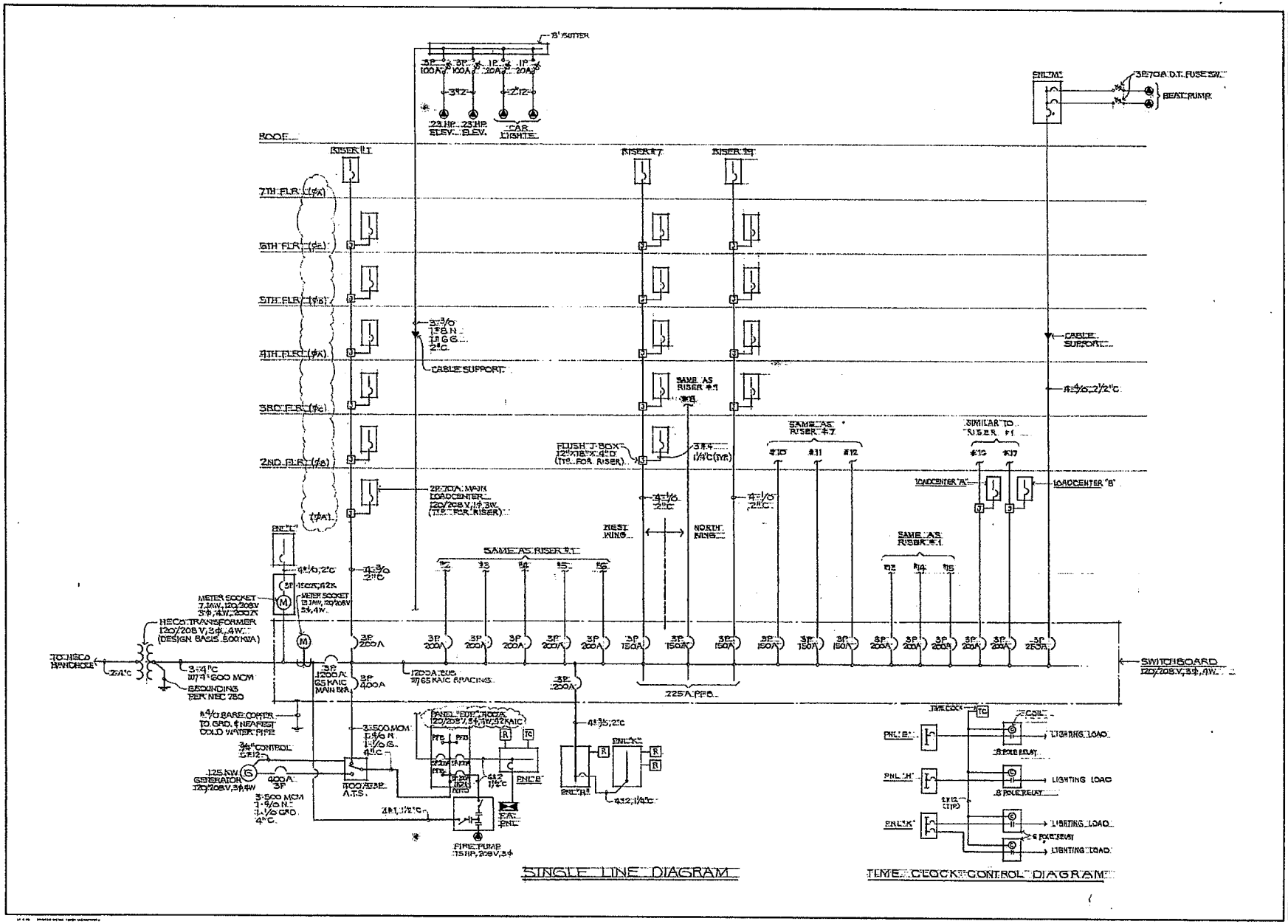

SINGLE LINE DIAGRAM

TIME CLOCK CONTROL DIAGRAM

REVISIONS	BY
BLDG. DEPT. COMM. 8/9/91	SC

PAUL LOUIE & ASSOCIATES, A.I.A.
ARCHITECTURE URBAN DESIGN INTERIORS

CROWN ELDERLY HOUSING (PHASE I)
HOUSING FINANCE AND DEVELOPMENT CORPORATION HFDC PROJ. NO. 90/091

SINGLE LINE DIAGRAM

Date 1-MAY-91
Scale AS NOTED
Drawn GMD/KMI
Job 9010
Sheet E-12

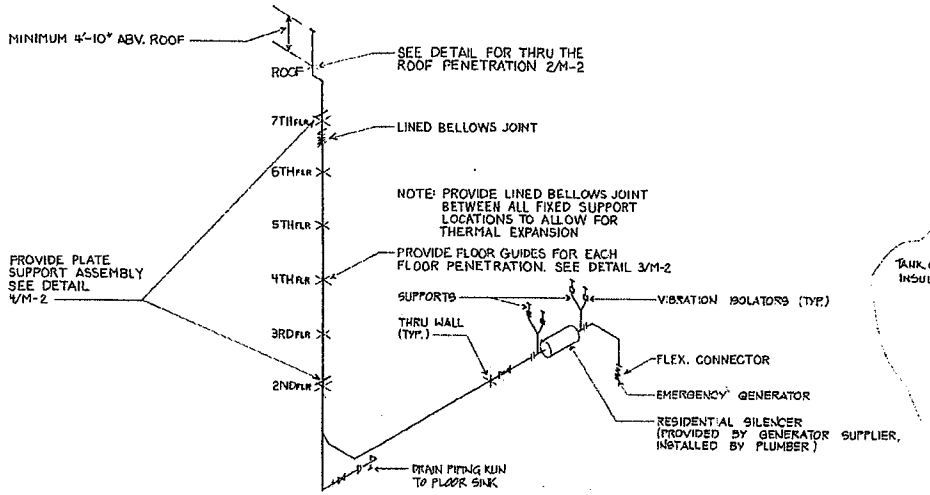

1 / M-21 EMERGENCY GENERATOR EXHAUST SYSTEM PIPING DIAGRAM
NOT TO SCALE

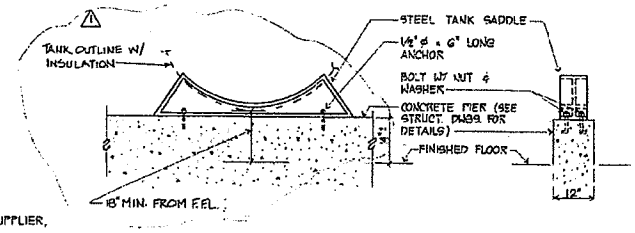

5 / M-21 HST SUPPORT PIER DETAIL
NOT TO SCALE

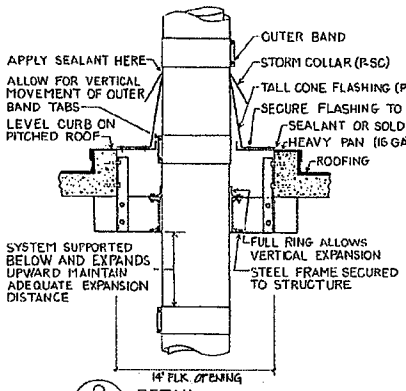

2 / M-21 DETAIL
NOT TO SCALE

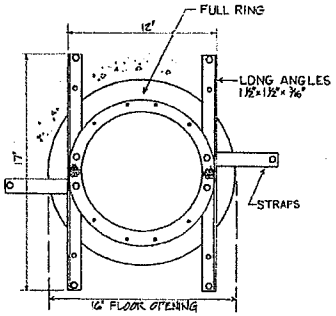

3 / M-21 FLOOR GUIDE DETAIL PLAN
NOT TO SCALE

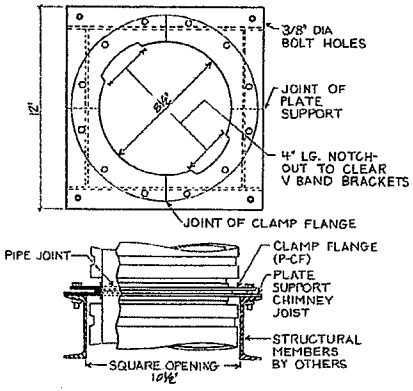

4 / M-21 PLATE SUPPORT ASSEMBLY DETAIL
NOT TO SCALE

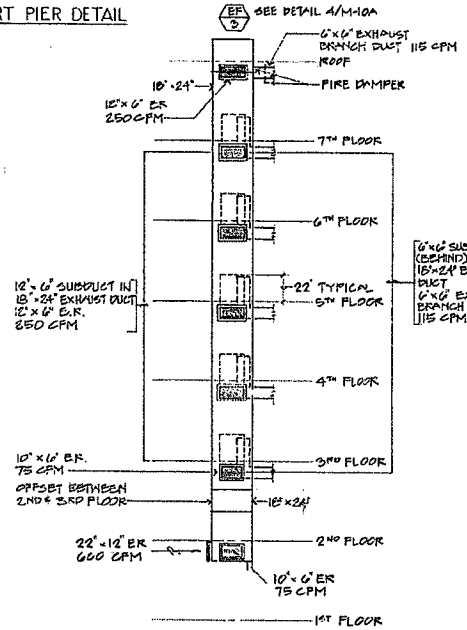

6 / M-21 TRASH ROOM EXHAUST DUCT RISER DIAGRAM
NOT TO SCALE

REVISIONS	BY
BLDG DEPT 1-6-92	
ADD. 2-5 10-11-91	

PAUL LOUIE & ASSOCIATES, A.I.A.

CROWN ELDERLY HOUSING (PHASE I)
HOUSING FINANCE AND DEVELOPMENT CORPORATION HFDC PROJ. NO. 1-91
EMERGENCY GENERATOR EXHAUST SYSTEM PIPING DIAGRAM

Date 1-May-91
Scale AS NOTED
Drawn PEY
Job
Sheet M-21 of Sheets

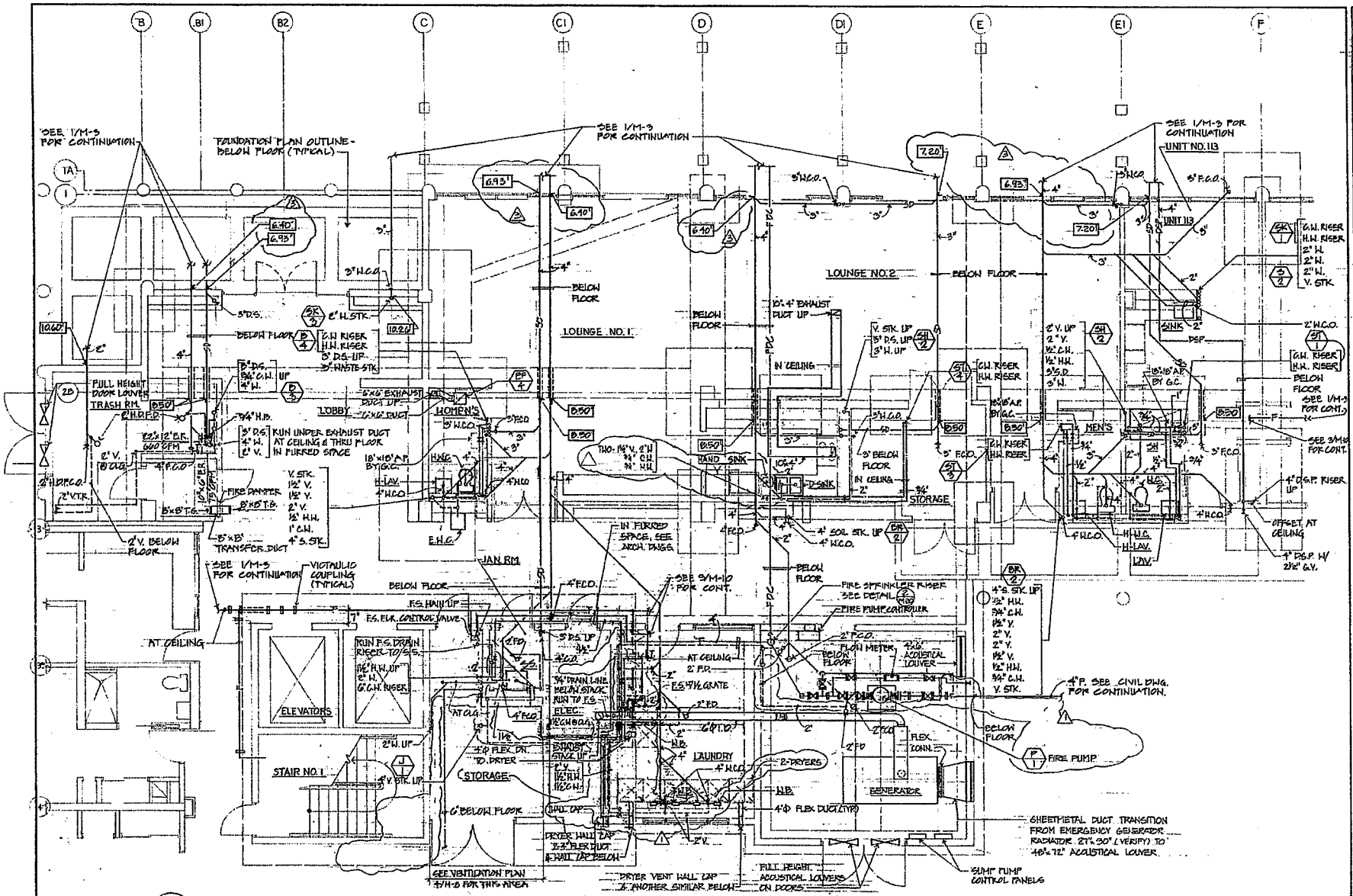

1 M-7 PARTIAL DETAIL PLAN - 1ST FLOOR

SCALE: 1/4" = 1'-0"

NOTE: SEE 3/M-10 FOR PARTIAL FS PLAN IN THIS AREA

REVISIONS	BY
1 BLDG DEPT 1-6-92	
2 ADDEN 2.5 10-9-91	
3 CLARIFICATION 3-22-92	

PAUL LOUIE & ASSOCIATES, A.I.A.
ARCHITECTURE URBAN DESIGN INTERIORS

CROWN ELDERLY HOUSING (PHASE I)
HOUSING FINANCE AND DEVELOPMENT CORPORATION HFDC PROJ. NO. 1-91

PARTIAL DETAIL PLAN - 1ST FLOOR

Date 1-May-91
Scale AS NOTED
Drawn G.W.
Job
Sheet M-7
Of Sheets

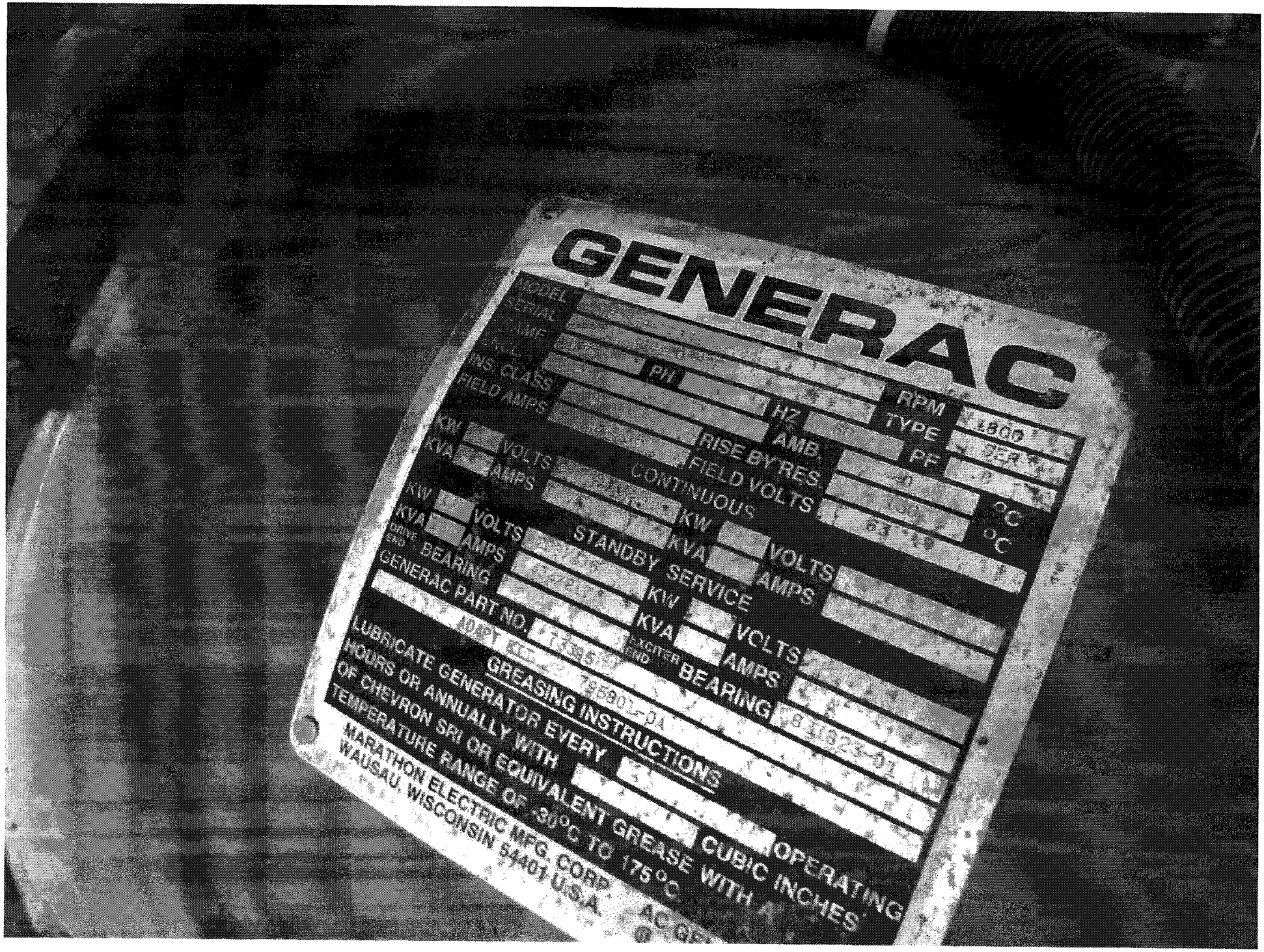
GENERAC
MODEL
SERIAL
FRAME
INS. CLASS
FIELD AMPS
PH
HZ
RPM
TYPE
PF
AMB.
RISE BY RES.
FIELD VOLTS
CONTINUOUS
KW
KVA
VOLTS
AMPS
°C
STANDBY SERVICE
DRIVE END BEARING
GENERAC PART NO.
EXCITER END BEARING
GREASING INSTRUCTIONS
LUBRICATE GENERATOR EVERY
HOURS OR ANNUALLY WITH
OF CHEVRON SRI OR EQUIVALENT GREASE WITH A
TEMPERATURE RANGE OF -30°C TO 175°C
OPERATING
CUBIC INCHES
MARATHON ELECTRIC MFG. CORP.
WAUSAU, WISCONSIN 54401 USA

APPENDIX A3: AMP 42

A3.4: Laiola

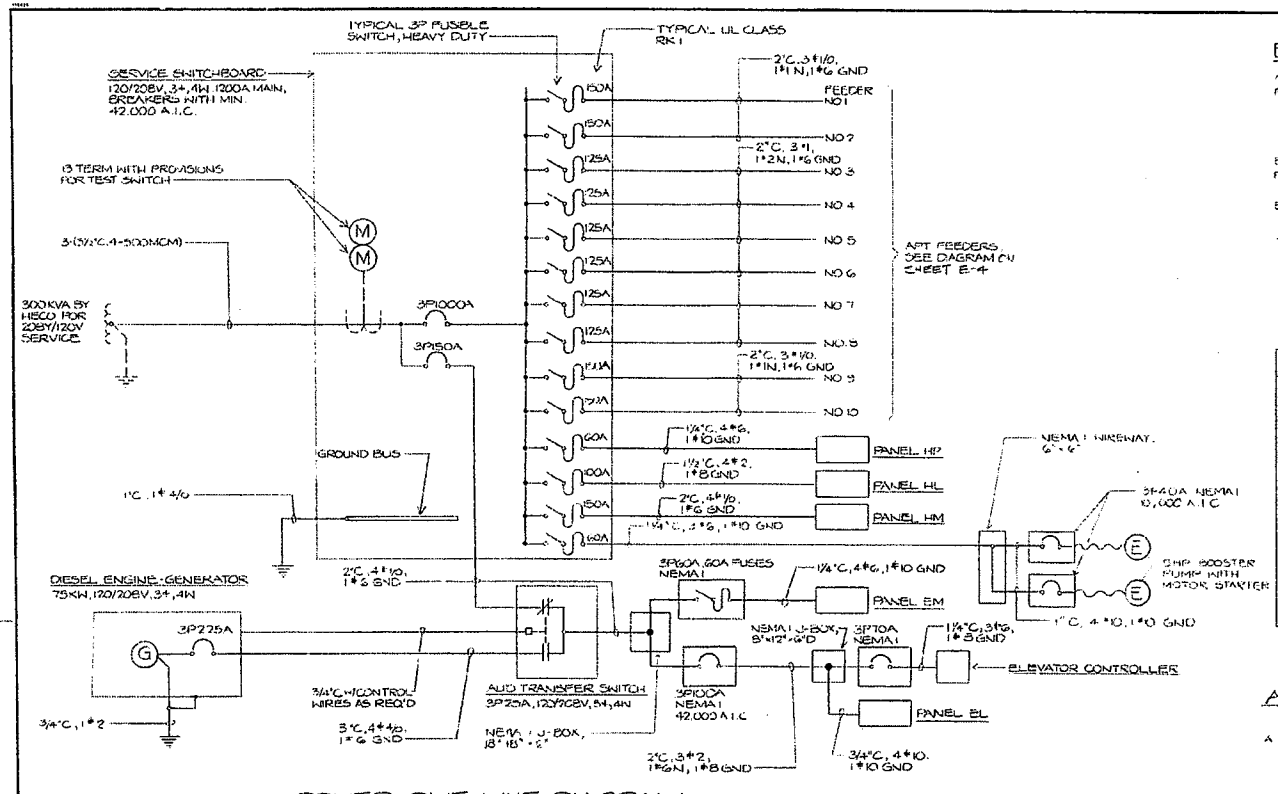

POWER ONE LINE DIAGRAM

SAME FOR BOTH BLDG A AND B

ELECTRICAL LOAD (ONE BUILDING)

APARTMENTS	174 KVA
PANEL HP	16
" HL	27
" HM	38
	255 KVA
EMERGENCY	
PANEL EM	12 KVA
" EL	3
ELEVATOR	27
	42 KVA
TOTAL	297 KVA

LIGHTING LOADS

CATEGORY	TYPE OF USE	AREA (SF)	ALLOWED WATTS/SF	ALLOWED WATTS	ACTUAL WATTS
A	OFFICE, MULTI-PURPOSE ROOM, MECHANICAL ROOM, ELECTRIC ROOM, ELEV MACH RM	2582	3	7746	4100
B	RESTROOM	128	1	128	200
C	LOBBY/STORAGE, CORRIDOR STAIRWAY, LANN, TRASH ROOM	7640	0.5	3820	4500
E	BUILDING PERIMETER	470LF	5/LF	2350	700
F	OUTDOOR PARKING	10,000	0.05	500	500
TOTALS (EXCLUDING APARTMENTS)				14,544	10,000

APARTMENT NEC LOAD CALCULATIONS

A. STUDIO - AREA: 250 SQ FT

GENERAL LIGHTING @ 3VA/SQ. FT 1,000 VA
KITCHEN APPLIANCES: 3,000
DISHWASHER 1,200
3,250 VA

3,000 VA @ 100%
3,250 VA @ 25%
RANGE

3,000 VA
812
8,000
11,812 VA - 57A @ 208V, 1φ

B. ONE BEDROOM - AREA 480 SQ. FT.

GENERAL LIGHTING @ 3VA/SQ. FT. 1,440 VA
KITCHEN APPLIANCES 3,000
DISHWASHER 1,200
5,640 VA

3,000 VA @ 100%
2,640 VA @ 25%
RANGE

3,000 VA
924
8,000
11,924 VA - 57A @ 208V, 1φ

2		GENERAL REVISIONS			
REVISION NO	SYM	DESCRIPTION	BY	DATE	APPROVED AND DATE

ROLAND N. J. TOM REGISTERED PROFESSIONAL ENGINEER No. 3797 S HAWAII, U.S.A.

THIS WORK WAS PREPARED BY ME OR UNDER MY SUPERVISION
16 OCT 85

DEPARTMENT OF BUSINESS AND ECONOMIC DEVELOPMENT
HOUSING FINANCE AND DEVELOPMENT CORPORATION
STATE OF HAWAII

WAHIAWA ELDERLY HOUSING
1103 CALIFORNIA AVENUE
WAHIAWA, OAHU, HAWAII

POWER ONE-LINE DIAGRAM

DESIGNED BY GT	CHECKED BY AM	DV - 2 - 88	DRAWING NO E-7
DRAWN BY SS	APPROVED BY RH	DATE	SHEET OF
POWER LINE			

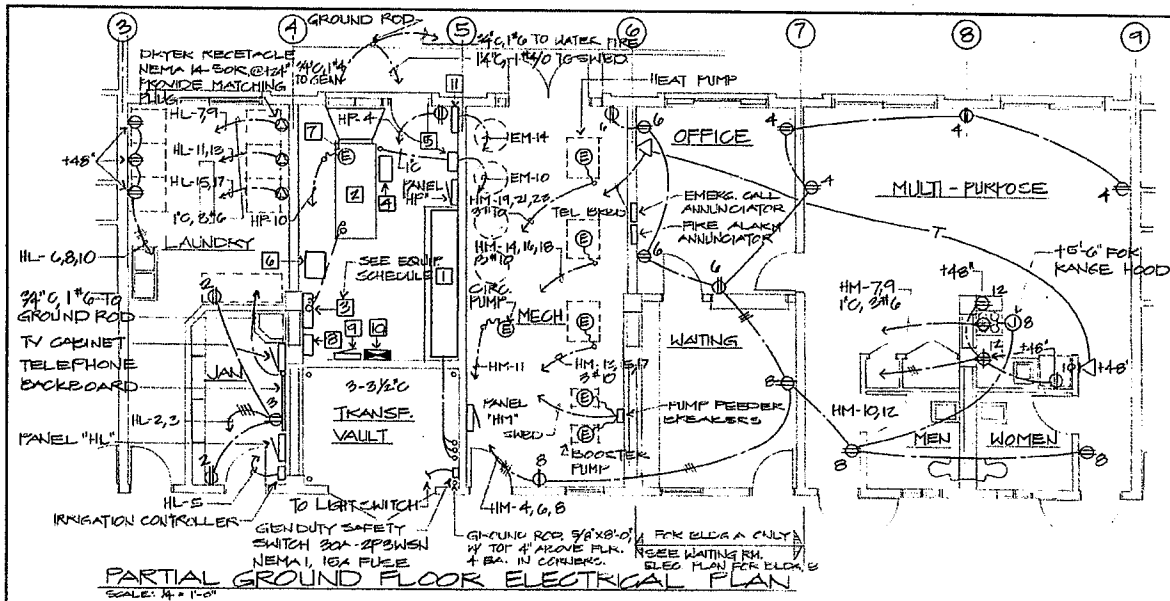

PARTIAL GROUND FLOOR ELECTRICAL PLAN
SCALE: 1/4" = 1'-0"

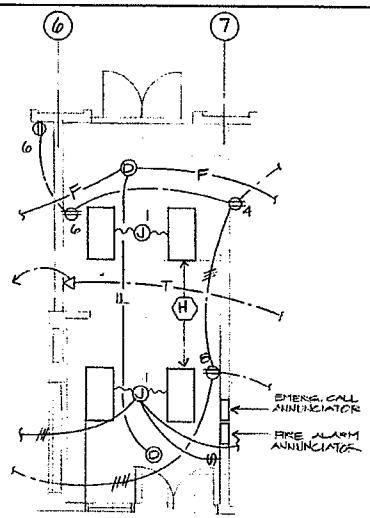

WAITING RM. ELECTRICAL PLAN
SCALE: 1/4" = 1'-0"

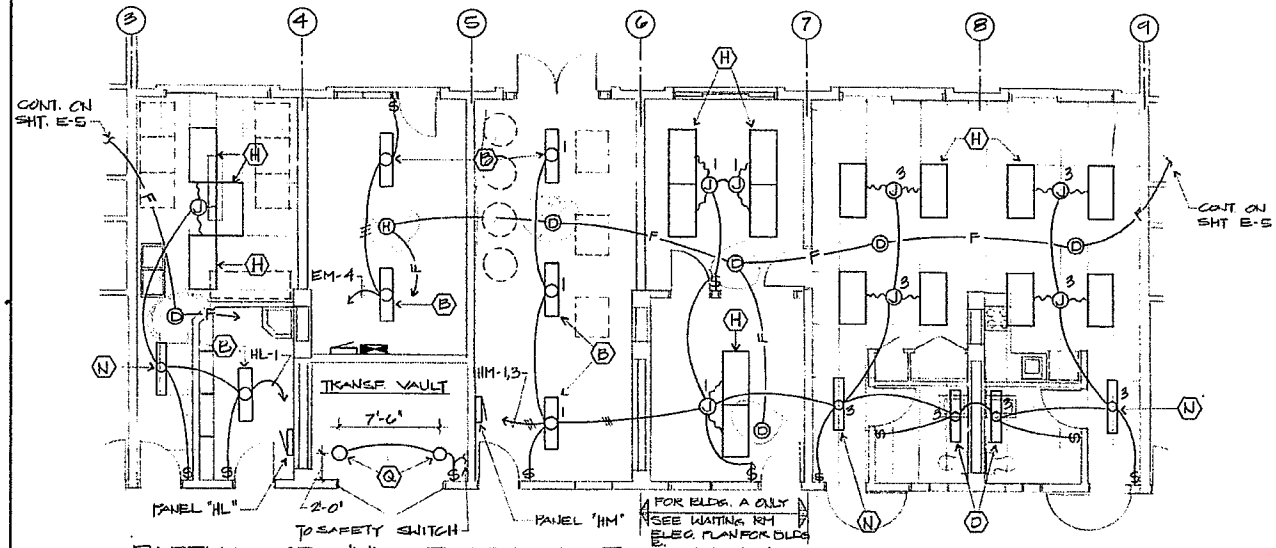

PARTIAL GROUND FLOOR LIGHTING PLAN
SCALE: 1/4" = 1'-0"

ELECTRICAL EQUIPMENT

SYM	DESCRIPTION
1	MAIN SWITCHBOARD SEE ELEV.
2	DIESEL GENERATOR SET
3	AUTOMATIC TRANSFER SWITCH
4	BATTERY AND RACK
5	BATTERY CHARGER
6	FUEL TANK
7	COOLANT HEATER ON ENGINE
8	EMERGENCY FEEDER BREAKERS
9	PANEL "EM"
10	FIRE ALARM CONTROL PANEL
11	EMERGENCY CALL CONTROL PANEL

DEPARTMENT OF BUSINESS ECONOMIC DEVELOPMENT
HOUSING FINANCE AND DEVELOPMENT CORPORATION
STATE OF HAWAII

PARTIAL GROUND FLOOR ELEC PLANS

DESIGNED BY KO	CHECKED BY SP	DV-2-86	E-8
DRAWN BY KN	APPROVED BY	DATE	SHEET
SCALE 1/4" = 1'-0"			

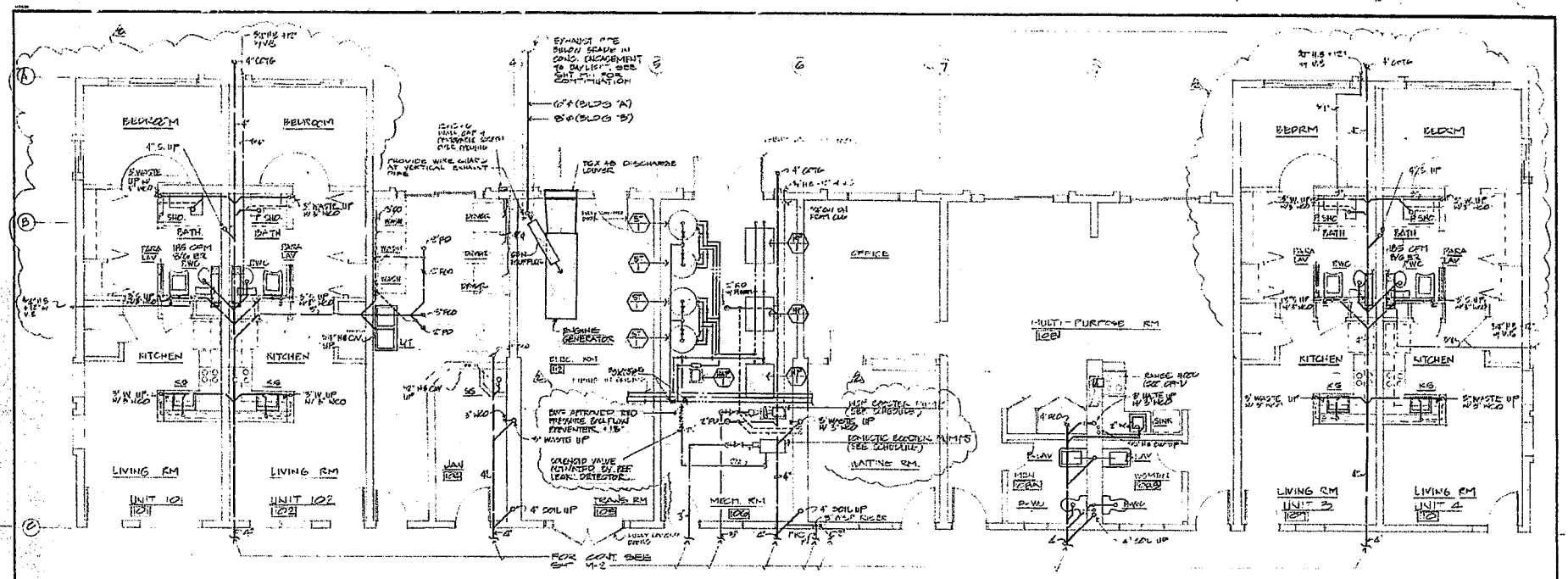

GROUND FLOOR DETAIL PLAN - BUILDING A & B
SCALE: 1/4"=1'-0"

NOTE:
PROVIDE SIGN ON EVERY HEAT PUMP READILY VISIBLE POSTED: "POTABLE WATER HEATING SYSTEM. CHECK HEAT EXCHANGER FOR LEAKS BEFORE ADDING REFRIGERANT."

REVISION NO	SYM	DESCRIPTION	DAY	DATE	APPROVED CHIEF CHIEF ENGINEER
2	2	GENERAL REVISION	3 10	6-1-89	
1	1	REVISED TOILET EXHAUST	1 5	1-17-89	

DEPARTMENT OF BUSINESS AND ECONOMIC DEVELOPMENT
HOUSING FINANCE AND DEVELOPMENT CORPORATION
STATE OF HAWAII

WAHIAWA ELDERLY HOUSING
1103 CALIFORNIA AVENUE
WAHIAWA, OAHU, HAWAII

GROUND FLOOR DETAIL PLAN-
BUILDING A & B

THIS WORK WAS PREPARED BY ME OR UNDER MY SUPERVISION

TAPEO MATSUMOTO & ASSOC. ARCHITECTS, A.I.A.

DESIGNED BY	CHECKED BY	MFG FIRM NO	DRAWING NO
L.U.	K.Y.	DV - 2 - 88	M-4
DRAWN BY	APPROVED BY	DATE	SHEET
L.U.			
SCALE AS NOTED			OF

CATERPILLAR
GENERATOR SET

EXHIBIT A4: AMP 30
Salt Lake Apartments

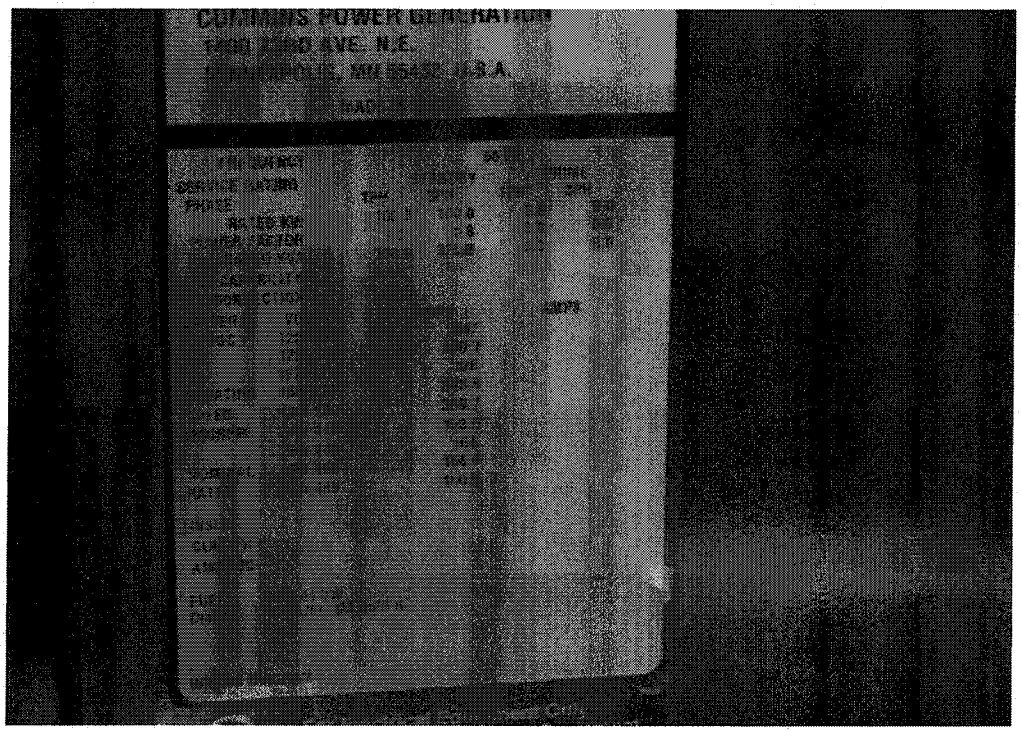

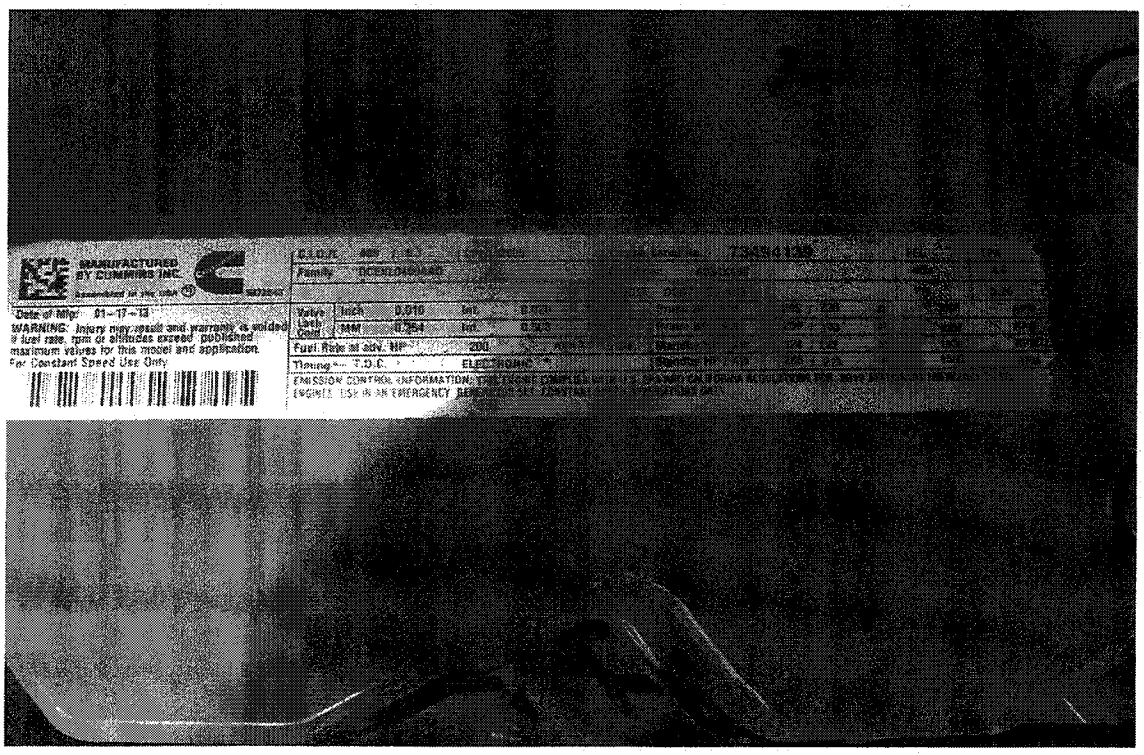
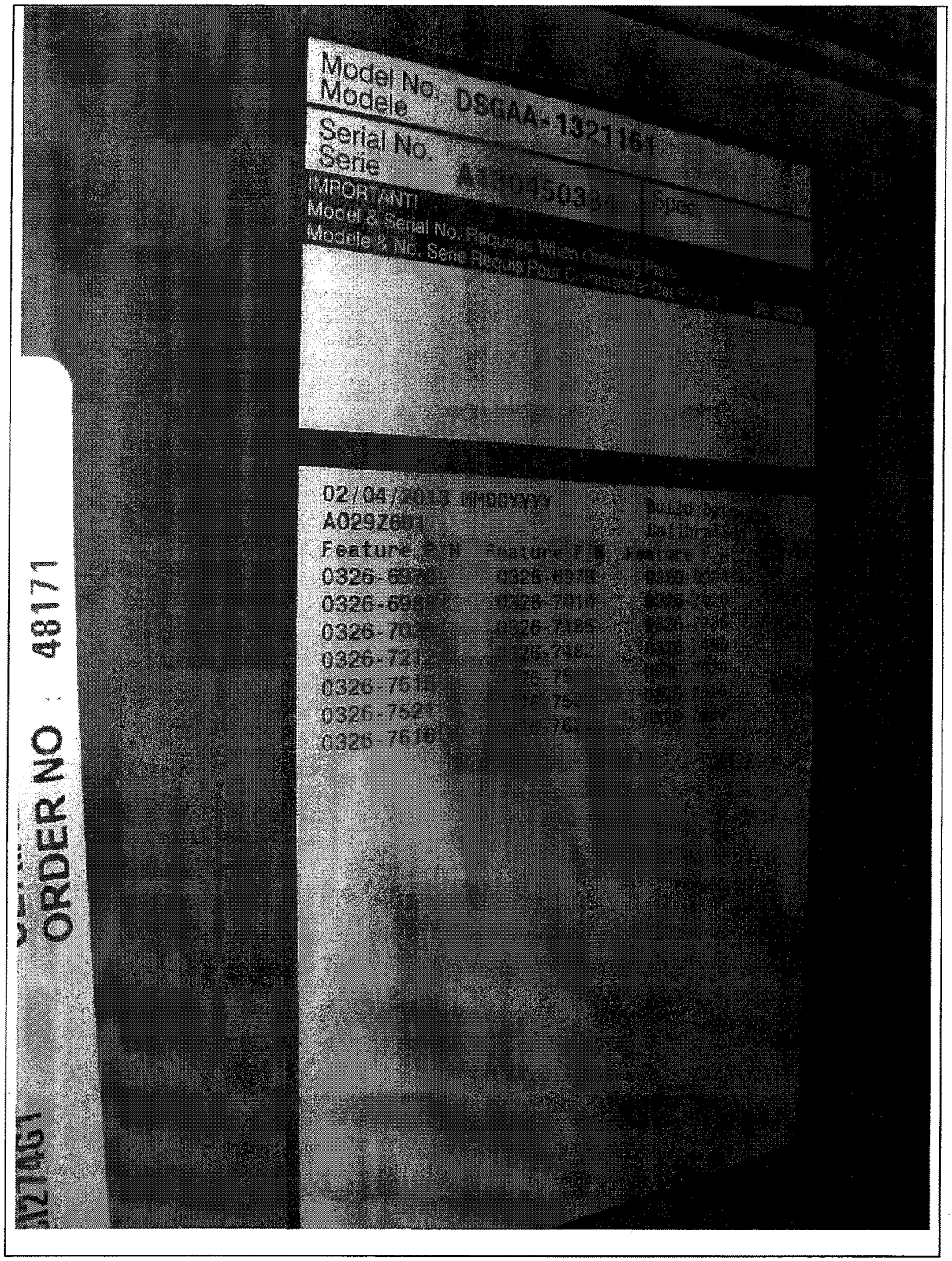
EXHIBIT A4: AMP 30
Salt Lake Apartments